HEGGERE TAYAMMA GOVT GIRLS HIGH SCHOOL, CHALLAKERE.

PRAYATNA: 50+

[The way to Success]

Maths Revision Notes : 2020 21

MEDIUM	ENGLISH	CLASS :	10TH

PRAKASH L, HTTGGHS, CHALLAKERE,CHITRADURGA-DIST

PART : 1 SKILL BASED QUESTIONS : 16 MARKS : -

SL NO	TYPE OF QUESTIONS	MARKS	Page No
1	Division of line segment	2	4
2	Construstion of a triangle similar to a given triangle	3/4	5-6
3	Construstion of tangents to a Circle	3	7-8
4	Graphical representation of cumulative frequency distribution.[OGIVES]	3	9-16
5	Graphical method of solution of a pair of linear equations [GRAPHS]	4	16-17
	TOTAL	**16Marks**	

PART : 2 : THEOREMS : 7/8 MARKS :-

SL NO	THEOREMS	MARKS		Page No
	THEOREMS ON TRIANGLES [1 QUESTIONS FOR 4/5 MARKS]			
1	THALES THEOREM [B.P. THEOREM] : "If a line is drawn parallel to one side of a triangle to intersect the other two sides in distinct points, the other two sides are divided in the same ratio."	4/5	4/5	18
2	Angle-Angle-Angle Criterion of Similarity of two triangles : "If in two triangles, corresponding angles are equal, then their corresponding sides are in the same ratio (or proportion) and hence the two triangles are similar."	4		18-19
3	Area of Similar triangles : " The ratio of the areas of two similar triangles is equal to the square of the ratio of their corresponding sides."	4		19-20
4	PYTHAGORAS THEOREM : 'In a right triangle, the square of the hypotenuse is equal to the sum of the square of the other two sides'	4/5		20
	THEOREMS ON CIRCLES [1 QUESTIONS FOR 3 MARKS]		03	
5	"The Lengths of tangents drawn from an external point to a circle are equal."	3		21
6	The tangent at any point of a circle is perpendicular to the radius through the point of contact.	3		21
	TOTAL	**7/8 Marks**		

PART : 3 : MOST EXPECTED QUESTIONS : 43 to 47 MARKS :-

SL NO	UNIT NAME	QUESTION TYPE	MARKS	Page No
1	Arithemetic Progressions	To find n^{th} term of an AP & Sum of first n terms of an AP	1+2+3 = 6/7	23-28
2	Pair of linear equations	Solve the pair of linear linear equations by Elimination method	1+2+3 =6	29-31
3	Coordinate geometry	Finding the distance between the pairs of points To find the area of the triangle when vertices are given	2 + 3 =5	32-45
4	Quadratic equation	Finding the solution for a given Quadratic Equation by Factorisation method / Quadratic equation method.	1+2+3 = 6	46-49
5	Introduction to trigonometry	Problems on trigonomerri ratios. Problems on Trigonometric Ratios of Complementary Angles	1+2+3/4 = 6/7	50-54
6	Some applications of trigonometry	Problems on Heights and distances.	= 3 / 4	55-64
7	Statistics	Problems on Mean/Mode/Median.	2+3=5	65-77
8	Mensuration	Problems on Surface area of a Combination of solids / Volume of Combination of Solids / Conversion of Solids from one shape to Another	1+2+3/4 =6/7	78-95
		TOTAL	**43/47 Marks**	

TOTAL EXPECTED MARKS

SL NO	TYPE OF QUESTIONS	MARKS (APPROXIMATELY)
1	Type -1	16
2	Type -2	7
3	Type -3	43/47
	total	**Minimum 60**

PART : 1 SKILL BASED QUESTIONS : 16 MARKS

I. DIVISION OF LINE SEGMENT :- [2-Marks questions]

Example : 1) Draw a line segment of length 6 cm and divide in the ratio 4:3.

AB = 6 cm

m: n = 4 : 3 =4+3 =7

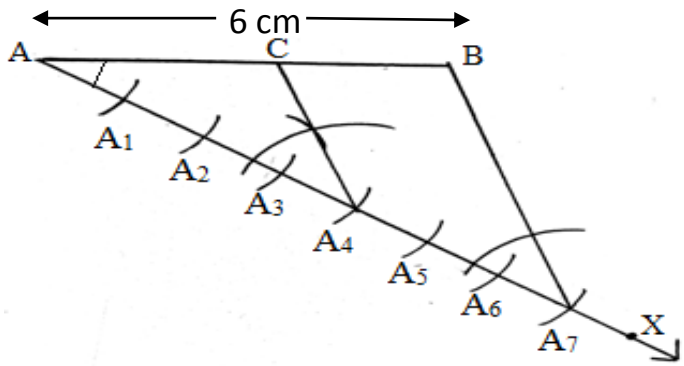

Steps of construction :

1. Draw a line segment AB=6 cm

2.Draw any ray AX making an acute angle downward with AB

3.Mark A_1, A_2, A_3, A_4, A_5, A_6, A_7 on AX such that $AA_1 = A_1A_2 = A_2A_3 = A_3A_4 = A_4A_5 = A_5A_6 = A_6A_7$. 4. Join BA_7.

5. Through the point A_4, draw a line parallel to BA_7 . To meet AB on C.

Hence AC : CB = 4 : 3

Alternative Method :

Steps of construction :

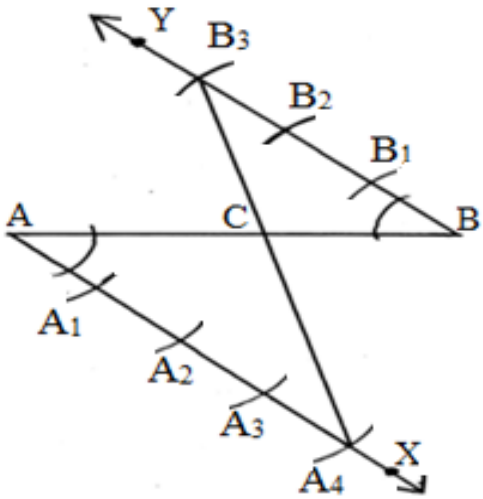

1. Draw a line segment AB=6 cm

2. Draw any ray AX making an acute angle with AB.

3. Draw a ray BY parallel to AX by making ∠ABY = ∠BAX

4. Locate the points A_1, A_2, A_3, A_4 (m=4) on AX and

B_1, B_2, B_3 (n = 2) on BY such that

$AA_1 = A_1A_2 = A_2A_3 = A_3A_4 = A_4 = BB_1 = B_1B_2 = B_2B_3$

5. Join A4 B. Let it intersect at C, **Then AC = CB = 4:3**

Practice questions :

1. Draw a line segment of length 7cm. find a point C on it which divides it in the ratio 3 : 5

2.Draw a line segment of length 5 cm and divide it in the ratio 3 : 7 .

3. Draw a line segment AB= 6 cm and divide it in the ratio 2 : 3.

4. Draw a line segment of length 7.6 cm and divide it in the ratio 5 : 8 . Measure the two parts.

II.CONSTRUCTION A TRIANGLE SIMILAR TO GIVEN TRIANGLE :-

[3/4 -Marks questions]

Type -I : If Given Scale factor is less than 1 :

Example : 1. Construct a ΔABC in which AB=4cm, BC=5cm and AC= 6cm. Then Construct another triangle whose sides are $\frac{2}{3}$ times the corresponding sides of ΔABC.

Scale factor = $\frac{2}{3} < 1$

BC= 5cm,

AB = 4cm

AC =6cm

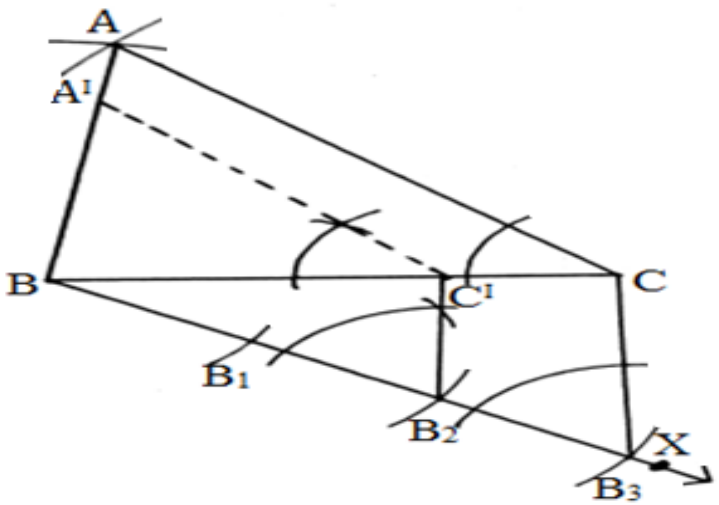

Steps of construction :

1. Draw a line segment BC=5cm.

2. With B as centre and radius AB=4cm, draw an arc.

3. With C as centre and radius AC=6cm, draw another arc, intersecting the arc drawn in steps -2 at the point A.

4. Join AB and AC to obtain ΔABC.

5.Below BC, make an acute angle $\angle CBX$.

6. Along BX mark off three points B_1, B_2, B_3 such that $BB_1=B_1B_2=B_2B_3$.

7.Join B_3C

8. From B_2, draw $B_2C^I \parallel B_3C$.

9. From C^I draw $C^IA^I \parallel CA$, meeting BA at the point A^I.

Then A^IBC^I is the required triangle.

Practice questions :

1.Construct a triangle similar to a given equilateral triangle ABC with sides 5cm such that each of its side is $\frac{6}{7}$ of the corresponding sides of the ΔABC.

2. Draw a triangle ABC with its sides BC = 6cm, AB=5cm and $\angle B = 60^0$. Then construct a triangle whose sides are $\frac{3}{4}$ of the corresponding sides of the ΔABC.

3. Construct a triangle whose hypotenuse and one side measures 10cm and 8cm respectively. Then construct another triangle whose sides are $\frac{4}{5}$ times of the corresponding sides of this triangle.

4. Draw an isosceles triangle ABC in which the base is 8cm long and its altitude AD through A is 4cm long. Then draw another triangle whose sides are $\frac{2}{3}$ of the corresponding sides of triangle ABC.

Type -II : If Given Scale factor is greater than 1 :

Example problem : 1) Construct a triangle with sides 5cm, 6cm and 7cm and then another triangle whose sides are $\frac{7}{5}$ of the corresponding sids of the first triangle. [March-2019]

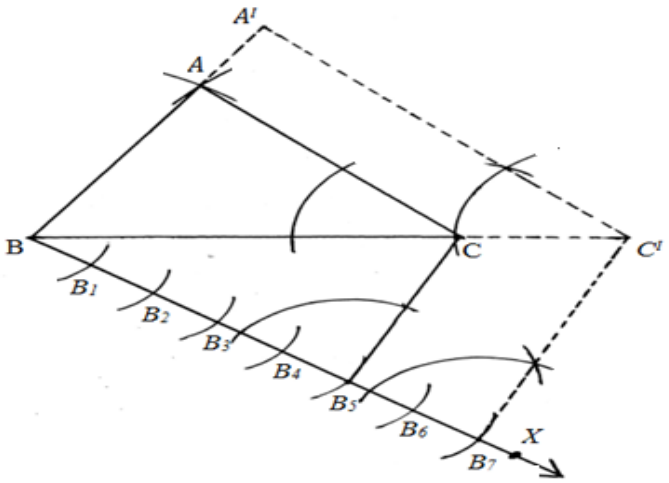

Scale factor = $\frac{7}{5} > 1$

BC= 7cm,

AB = 5cm

AC =6cm

Steps of construction :

1. Draw a line segment BC=7cm

2. With B as centre and radius AB=5cm, draw an arc.

3. With C as centre and radius AC=6cm, draw another arc, intersecting the arc drawn in steps -2 at the point A.

4. Join AB and AC to obtain ΔABC.

5.Below BC, make an acute angle $\angle CBX$.

6. Along BX mark off three points B_1, B_2, B_3,B_4, B_5, B_6, B_7 such that $BB_1=B_1B_2=B_2B_3=B_3B_4=B_4B_5=B_5B_6=B_6B_7$

7.Join B_5C

8. From B_7, draw $B_7C' \parallel B_5C$.

9. From C' draw $C'A' \parallel CA$, meeting BA at the point A'.

Then $A'BC'$ is the required triangle.

Practice questions : [3/4 Marks]

1.Construct an isoscelestriangle whose base is 8cm and altitude 4cm and then another triangle whose sides are $1\frac{1}{2}$ times the corresponding sides of the first triangle ABC.

2. Draw a triangle ABC with sides BC=7cm, $\angle B=45^0$, $\angle C=105^0$. Then, Construct a triangle whose sides are $\frac{4}{3}$ times the corresponding sides of the first triangle ABC.

3. Draw a right triangle in which the sides (other than hypotenuse)are of lengths 4cm and 3cm. Then construct another triangle whose sides are $\frac{5}{3}$ times the corresponding sides of the given triangle .

4. Construct a triangle with sides 5cm, 6cm and 7cm and then another triangle whose sides are $\frac{3}{5}$ of the corresponding sids of the first triangle. **[June-2019]**

5. Draw a triangle ABC with side base BC= 8cm and altitude 4cm, and then construct another triangle whose sides are $\frac{5}{3}$times the corresponding sides of the isosceles triangle ABC. **[Kseeb model paper-1: 3 Marks]**

6. Draw a right triangle in which the sides (other than hypotenuse)are of lengths 8cm and 6cm. Then construct another triangle whose sides are $\frac{5}{3}$ times the corresponding sides of the given triangle . **[Kseeb model paper-2: 4 Marks]**

III. CONSTRUCTION OF TANGENTS TO A CIRCL [2 MARKS QUESTIONS]

Example Question : Type -1 :

Draw a circle of radius 6cm. from a point 10cm away from its centre, construct the pair of tangents to the circle and measure their lengths.....

OP =10cm

Radius = 6cm

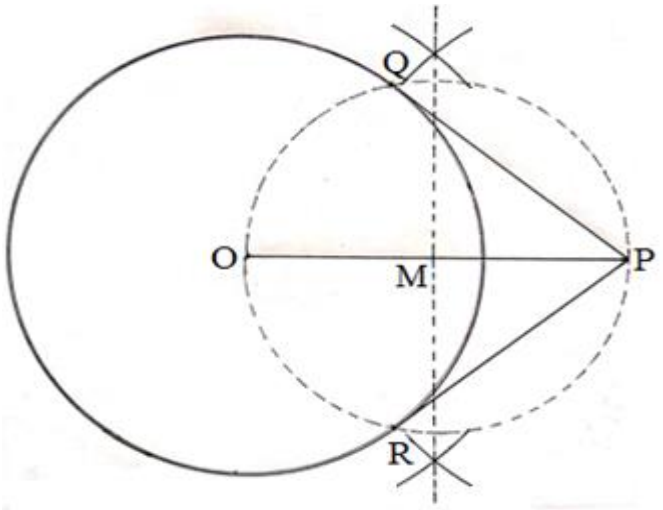

Lengths of the tangents PR = PQ = 8cm.

Steps of Construction :

1. Draw a line segment OP= 10cm.
2. From the point O draw a circle of radius 6cm.
3. Draw a perpendicular bisector of OP . Let M be the mid point of OP.
4. Taking M as centre and OM as radius draw a circle.
5. Let this circle intersects the given circle at the point of Q and R.
6. Join PQ and PR.
7. Hence PQ and PR are the required tangents. Measure length of these tangents with the help of scale.

Practice problems :

1. **Draw a circle of radius 4cm. from a point 8cm away from its centre, construct the pair of tangents to the circle and measure their lengths.** **[Kseeb model paper-2: 2 Marks]**

2. Draw a circle of radius 3cm. Construct a pair of tangents to it, from a point 8cm away from its centre. **[Kseeb model paper-1: 2 Marks]**

3. Draw a circle of radius 5cm. Mark a point A which is 8cm away from its centre O, construct the tangents AB and AC . Measure the lengths of AB and AC.

4. Draw a circle of radius 3cm, from a point P, 7cm away from its centre draw two tangents to the circle. Measure the lengths of the each tangents

5.Draw a circle of radius 3cm, from a point P, 5cm away from its centre draw two tangents to the circle. Measure the lengths of the each tangents

Example Question : Type -2 :

1)Draw a circle of radius 4cm. draw two tangents to the circle inclined at an angle of 60^0 to each other.

Ans : The angle between the radii = 180^0 – Angle between tangents.

$$= 180^0 - 60^0 = 120^0$$

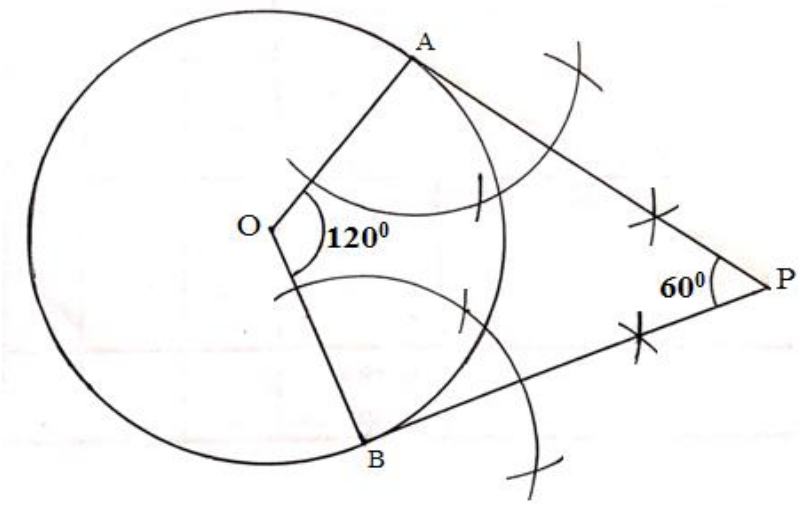

Steps of Construction :

1. Draw a circle of radius 4cm with centre 'O'.

2. Draw two radii OA and OB inclined to each other at an angle of 120^0

3. Draw AP OA at A and BP OB at B.which meet at P.

4.PA and PB are the required tangents inclined to each other at an angle of 60^0.

Practice problems :

1. Draw a pair of tangents to a circle of radius 5cm. which are inclined to each other at an angle of 60^0.

2. Draw a pair of tangents to a circle of radius 3.5cm. which are inclined to each other at an angle of 60^0.

3. Construct a tangent toa circle of radius 4cm from a point on the concentric circle of radius 6cm and measure its length.

4. Draw a circle of radius 3cm. Take two points P and Q on one of its extended diameter each at a distance 7cm from its centre. Draw tangents to the circle from these two points P and Q.

5. Draw a line segment AB of length 8cm. Taking A as centre, draw a circle of radius 4cm and B as centre, draw a another circle of radius 3cm. construct tangents to each circle from the centre of the other circle.

2.GRAPHICAL REPRESENTATION OF CUMULATIVE FREQUENCY DISTRIBUTION : [OGIVES] (3-Marks)

An Ogive is a graphic showing the curve of a cumulative distribution function drawn by hand.

1. LESS THAN TYPE :

Example -1 : The following distribution gives the daily income of 50 workers of a factory.

Daily income (in ₹)	100 - 120	120 - 140	140 - 160	160 - 180	180 - 200
Number of workers	12	14	8	6	10

Convert the distribution above to a lessthan type cumulative frequency distribution, and draw its ogives.

Ans : Frequency distribution for lessthan type :

Daily income (in ₹)	**Number of workers (f)**	**Cummulative frequency (cf)**	**Coordinate points**
Lessthan 120	12	→ 12	(120, 12)
Lessthan 140	14	14+12 = 26	(140, 26)
Lessthan 160	8	8+26 = 34	(160, 34)
Lessthan 180	6	6+34 = 40	(180, 40)
Lessthan200	10	10+40 = 50	(200, 50)
	$\sum f_i$ **=50**		

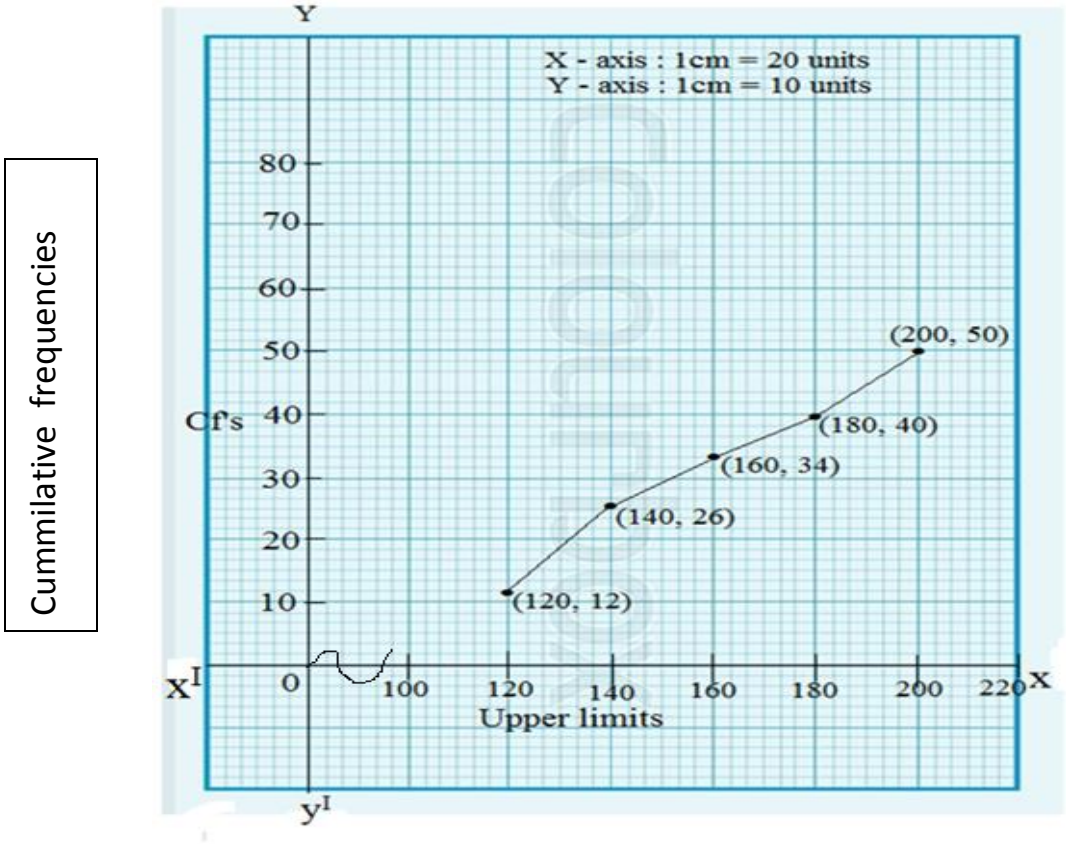

Practice Problems :

1.The following distribution gives the daily income of 50 workers of a factory.

Daily income (in Rs)	Number of workers
100 – 150	15
150 – 200	12
200 – 250	10
250 – 300	8
300 – 350	5

Convert the distribution above to a 'less than type' cumulative frequency distribution , and draw its Ogives. **[Kseeb model paper-2]**

2. The following distribution gives the distribution of life times of washing machines of a certain company :

Life time (in hour)	1000 - 1200	1200 - 1400	1400 – 1600	1600 – 1800	1800 – 2000	2000 - 2200	2200 - 2400
Number of washing machines	15	60	68	86	75	61	45

Convert the above distribution to a 'Less than' cumulative frequency distribution.

3. The following distribution gives the daily income of 50 workers of a factory:

Daily Income (In Rs)	200-250	250-300	300-350	350-400	400-450	450-500
Number of Workers	10	5	11	8	6	10

Convert the above distribution to a 'Less than' cumulative frequency distribution.

4. Draw the 'Less than Ogive' for the following distribution.

Class	20-30	30-40	40-50	50-60	60-70	70-80	80-90
Frequency	10	8	12	24	6	25	15

5. The following are the ages of 200 patients getting medical treatment in a hospital on a particular day:

Age(In year)	10-20	20-30	30-40	40-50	50-60	60-70
Number of patients	40	22	35	50	23	30

Write the above distribution as 'Less than type' cumulative frequency distribution.

Example :-2: In a annual day of a school, age-wise participation is shown in the following. Draw a ' less than type' Ogive.

Age of Students	No.of Children C. f
Less than 7	20
Less than 9	38
Less than 11	60
Less than 13	85
Less than 15	105
Less than 17	120
Less than 19	130

Ans :

Age of Students	number of students c.f	Coordinate points
Less than 7	20	(7, 20)
Less than 9	38	(9, 38)
Less than 11	60	(11, 60)
Less than 13	85	(13, 85)
Less than 15	105	(15, 105)
Less than 17	120	(17, 120)
Less than 19	130	(19, 130)

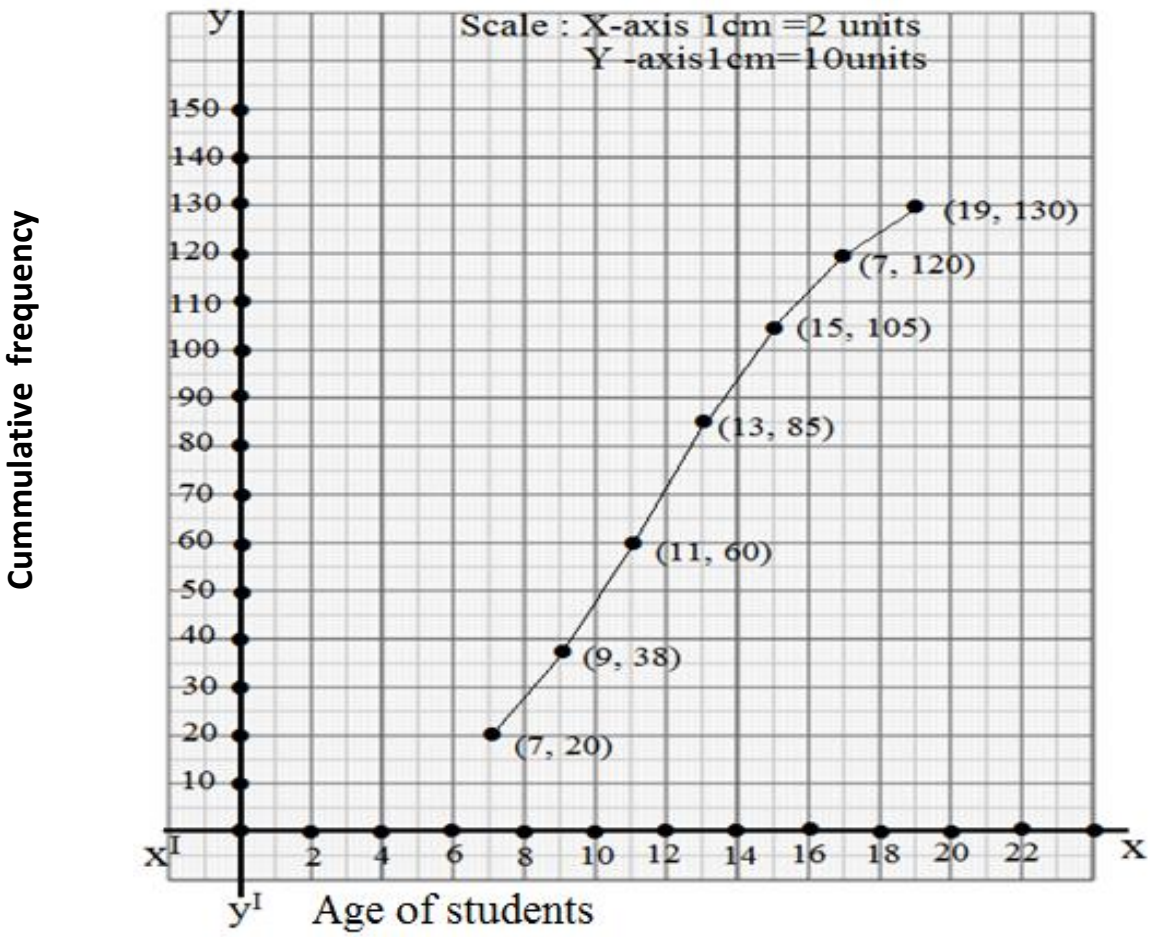

Example : 3.During the medical check-up of 35 students of a class ,their weights were recorded as follows **[March/April-2019]**

Weight (in kg)	number of students
Less than 38	0
Less than 40	3
Less than 42	5
Less than 44	9
Less than 46	14
Less than 48	28
Less than 50	32
Less than52	35

Draw a less than type Ogive for the given data. Hence obtain the median weight from the graph and verify the result by using the formula.

Ans :

Weight in kg	38	40	42	44	46	48	50	52
No. of students (Cf)	0	3	5	9	14	28	32	35
Coordinate points	(38,0)	(40,3)	(42,5)	(44,9)	(46,14)	(48,28)	(50,32)	(52,35)

Median From the graph $= \frac{N}{2} = \frac{35}{2} = 17.5$

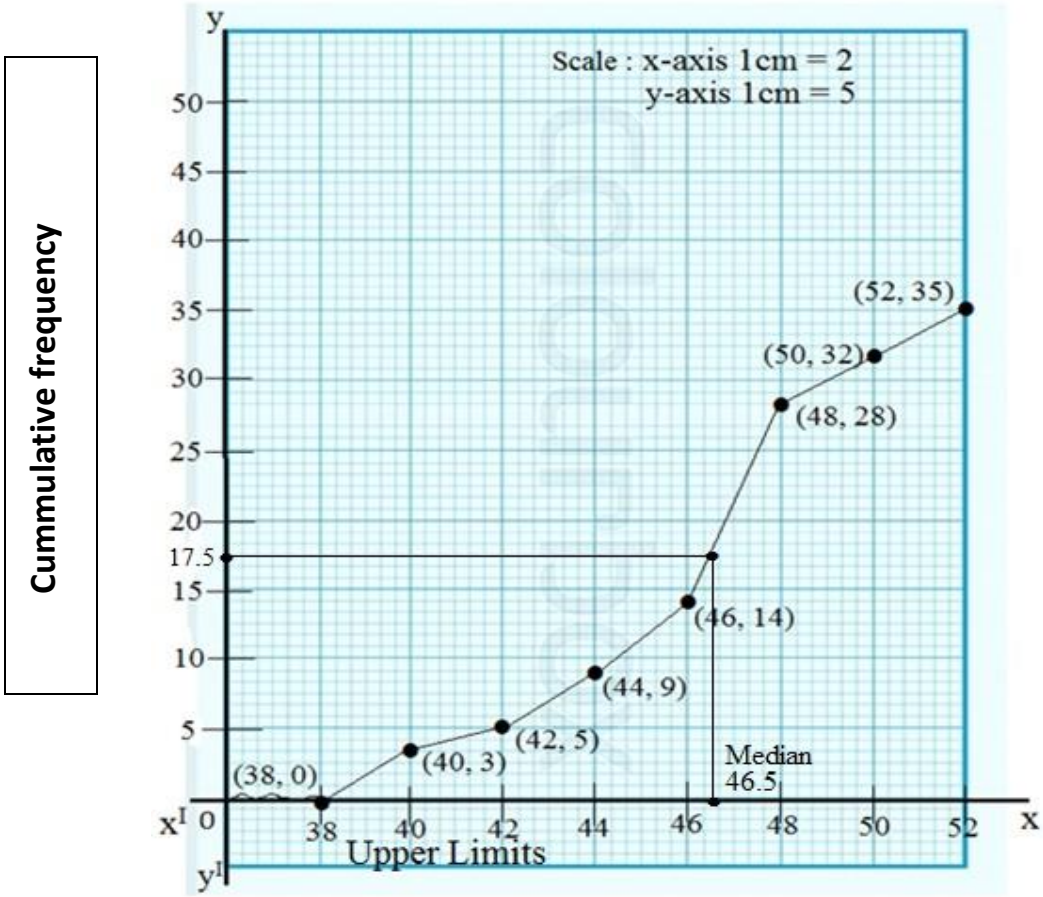

2. MORE THAN TYPE :

Example -1 : The following table gives production yield per hectare of wheat of 100 farms of a village: **[June - 2019]**

Production yield (In kg/ha)	50-55	55-60	60-65	65-70	70-75	75-80
Number of farms	2	8	12	24	38	16

Change the distribution to a 'More than type' distribution, and draw its Ogives.

Ans :

Production yield (In kg/ha)	Number of farms (f)	Cummulative Frequency (Cf)	Coordinate points
More than 50	2	100	(50, 100)
More than 55	8	100 - 2 = 98	(55, 98)
More than 60	12	98 – 8 = 90	(60, 90)
More than 65	24	90- 12 = 78	(65, 78)
More than 70	38	78 - 24 = 54	(70, 38)
More than 75	16	54 - 38 =16	(75, 16)
	N = 100		

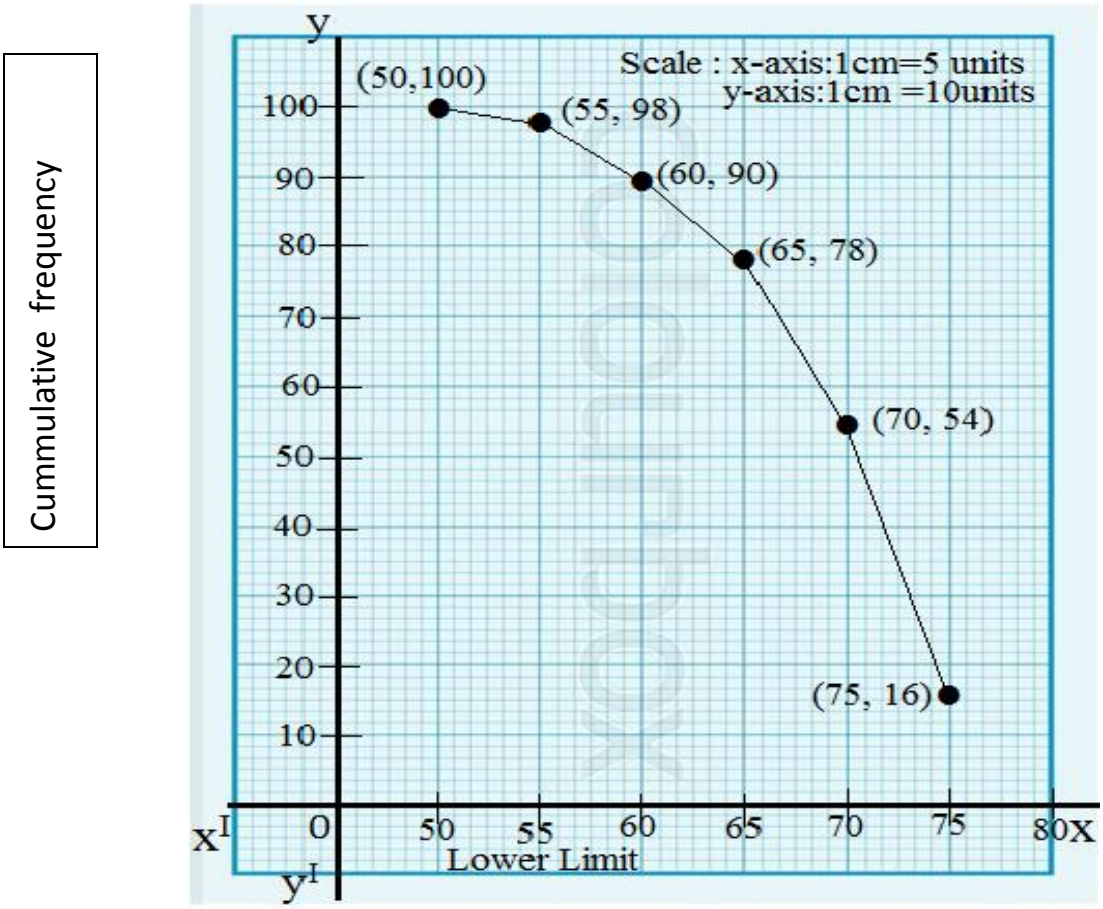

Practice Problems :

1. The following table gives production yield per hectare of wheat of 100 farms of a village. Draw 'More than type' Ogive. **[Kseeb model paper-1]**

yield Production	40-45	45-50	50-55	55-60	60-65	65-70
Number of farms	4	6	16	20	30	24

Ans :

Production yield (In kg/ha)	Number of farms (f)	Cummulative Frequency (Cf)	Coordinate points
More than 40	4	**100**	(40, 100)
More than 45	6	100 - 4 = 96	(45, 96)
More than 50	16	96 – 6 = 90	(50, 90)
More than 55	20	90 - 16 = 74	(55, 74)
More than 60	30	74 – 20 = 54	(60, 54)
More than 65	24	54 - 30 = 24	(65, 24)
	N = 100		

2.The given distribution shows the number of runs scored by the batsmen in inter school cricket matches. Draw 'More than type' Ogive.

Runs scored	0 - 50	50 - 100	100 - 150	150 - 200	200 – 250
Number of batsmen	4	6	9	7	5

3. Given below is a frequency distribution table showing daily income of 100 workers of a factory. Draw a 'More than Ogives' for this data.

Daily income of workers (in Rs)	200-300	300-400	400-500	500-600	600-700
Number of Workers	12	18	35	20	15

Example -2 : Draw a 'more than ogive' for the given data :

Ans :

Marks	number of students (C f)	Coordinate points
More than 10	100	(10, 100)
More than 20	90	(20, 90)
More than 30	75	(30, 75)
More than40	45	(40, 45)
More than50	13	(50, 13)
More than60	5	(60, 5)
More than70	0	(70, 0)

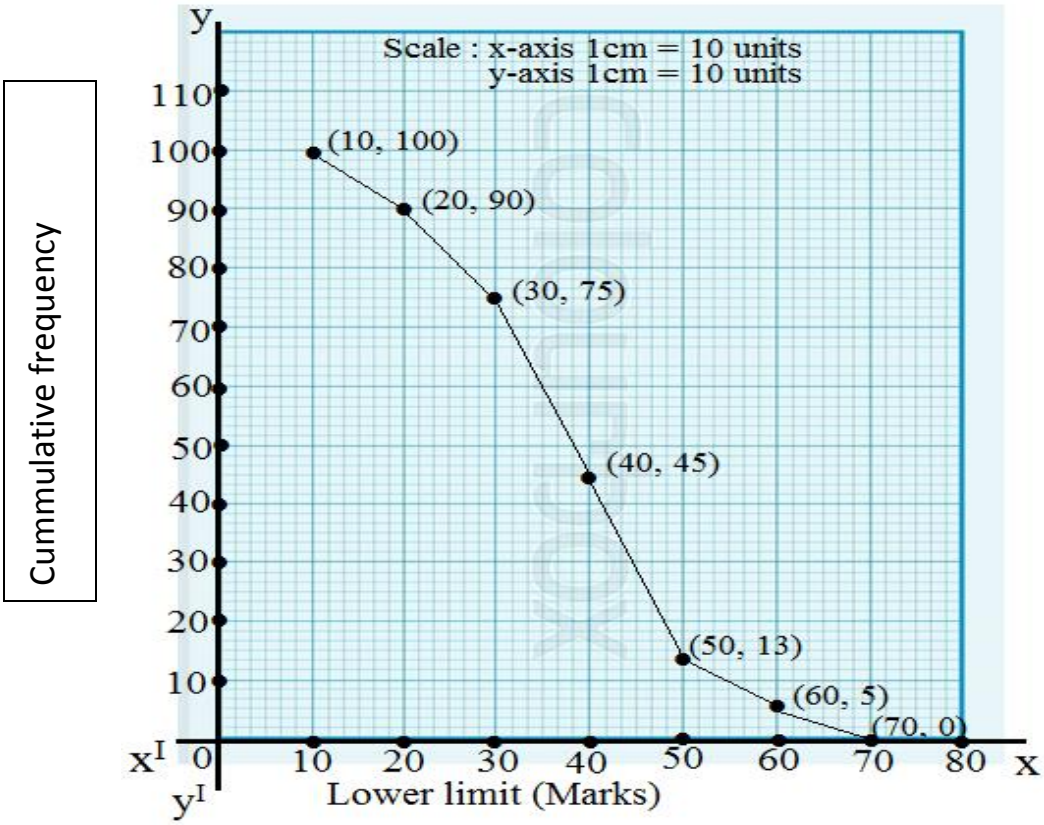

Practice Questions :

1. Draw a ,More than Ogives, for the following table.

Weight (In kg)	Cumulative frequency
More than 0	120
More than 10	106
More than 20	89
More than 30	67
More than 40	41
More than 50	18
More than 60	0

2. Draw a More than Ogives, for the following data.

Weight (In kg)	Cumulative frequency
More than 0	120
More than 10	106
More than 20	89
More than 30	67
More than 40	41
More than 50	18
More than 60	0

3. The following data gives the life times of washing machines of a certain company.

Life time (In hours)	Cumulative frequency
More than 1200	400
More than 1400	350
More than 1600	220
More than 1800	150
More than 2000	120
More than 2200	80
More than 2400	50

4.Graphical method of solution of a pair of linear equations : [GRAPHS]:

[4 –Marks Questions]

1. Solve the pair of linear equations graphically : x-2y =0 and 3x+4y =20

[Kseeb Model paper -1: 2019]

$x - 2y = 0$

$2y = x \qquad \therefore\ y = \frac{x}{2}$

x	0	2	4	6	-2
y	0	1	2	3	-1

Put x = 0, $y = \frac{0}{2} = 0$

Put x = 2, $y = \frac{2}{2}$

Put x = 4, $y = \frac{4}{2} = 2$

Put x = 6, $y = \frac{6}{2} = 3$

Put x = -2, $y = \frac{-2}{2} = -1$

$3x + 4y = 20$

$4y = 20 - 3x \qquad \therefore\ y = \frac{20-3x}{4}$

x	0	4	-4	8	- 8
y	5	2	8	-1	11

Put x = 0, $y = \frac{20-3(0)}{4} = \frac{20}{4} = 5$

Put x = 4, $y = \frac{20-3(4)}{4} = \frac{20-12}{4} = \frac{8}{4} = 2$

Put x = - 4, $y = \frac{20-3(-4)}{4} = \frac{20+12}{4} = \frac{32}{4} = 8$

Put x = 8, $y = \frac{20-3(8)}{4} = \frac{20-24}{4} = \frac{-4}{4} = -1$

Put x = - 8, $y = \frac{20-3(-8)}{4} = \frac{20+24}{4} = \frac{44}{4} = 11$

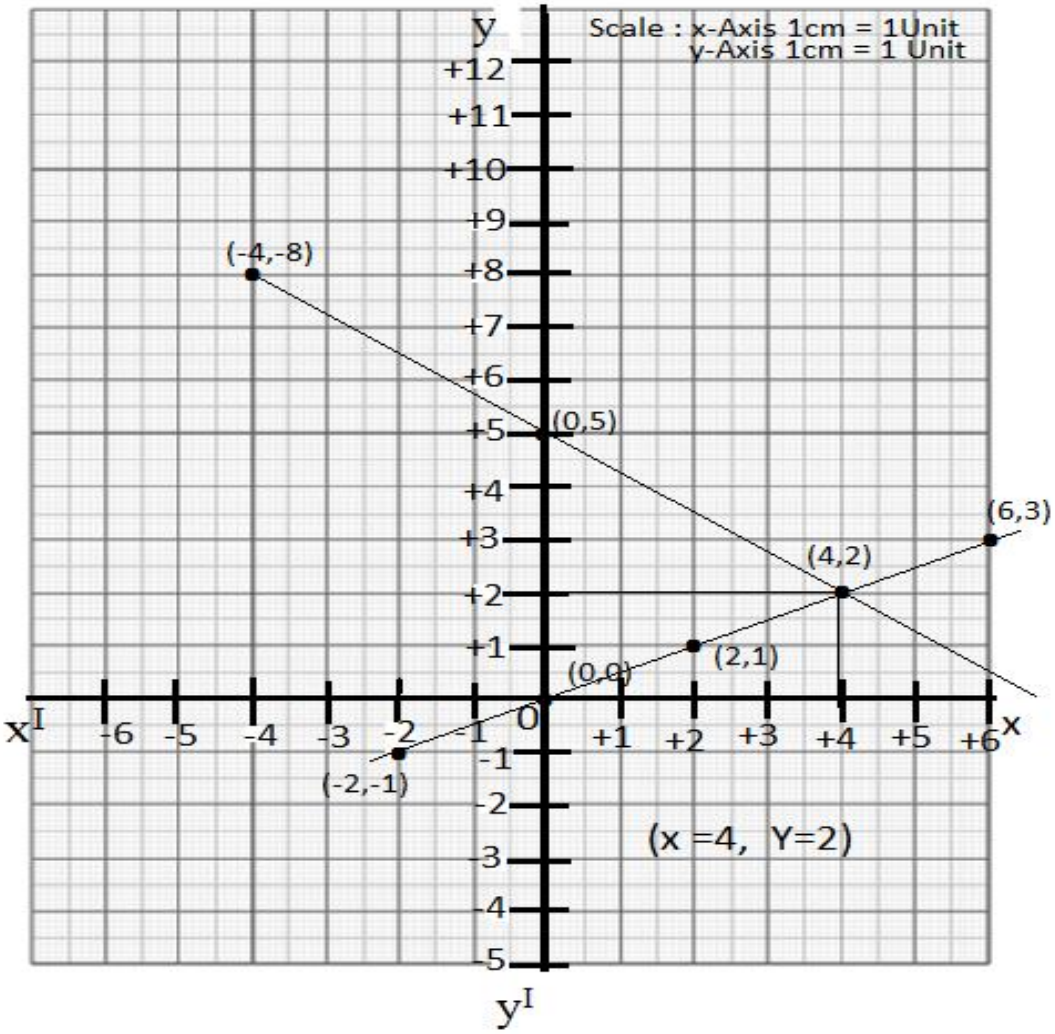

Practice Problems :

1. Solve graphically : $5x + y = 17$ and $2x - 2y = 2$ **[Kseeb Model paper -2: 2019]**

2. Solve graphically : $2x + y = 6$ and $2x - y = 2$ **[March /April : 2019]**

3. Solve graphically : $2x + y = 8$ and $x - y = 1$ **[June- 2019]**

4.Solve graphically : $x - 2y = 0$, and $3x + 4y = 20$

5.Solve graphically $x + y = 10$, and $y - x = 4$

6.Solve graphically : $2x + y - 6 = 0$, and $4x - 2y - 4 = 0$

7. Solve graphically : $2x - 2y - 2 = 0$, and $4x - 3y - 5 = 0$

8. Solve graphically : $x - y + 1 = 0$, and $3x + 2y - 12 = 0$

9. Solve graphically : $2x + y - 6 = 0$, and $4x - 2y - 4 = 0$

10. Solve graphically : $4x - y = 4$, and $3x + 2y = 14$

11. Solve graphically : $x + 2y = 5$, and $2x - 3y = -4$

12. Solve graphically : $3x - y = 7$ and $2x + 5y + 1 = 0$

13. Solve graphically : $3x - 4y + 3 = 0$, and $3x + 4y - 21 = 0$

14. Solve graphically : $5x + 7y = 50$ and $7x + 5y = 46$

PART : 2 : THEOREMS : 7 MARKS

I. THEOREMS ON TRIANGLES : [4/5 MARKS]

1. THALES THEOREM [B.P. THEOREM] :

"If a line is drawn parallel to one side of a triangle to intersect the other two sides in distinct points, the other two sides are divided in the same ratio."

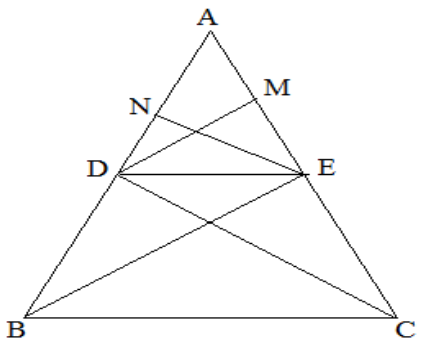

DATA : In ΔABC , DE ∥ BC

TO PROVE : $\frac{AD}{DB} = \frac{AE}{EC}$

CONSTRUCTION :

Join BE and CD. Draw EN ⊥ AB and DM ⊥ AC

PROOF: In ΔADE and ΔBDE

Area(ΔADE) = $\frac{1}{2} \times AD \times EN$ ($\because$ Area of $\Delta = \frac{1}{2} \times b \times h$)

Area(ΔBDE) = $\frac{1}{2} \times BD \times EN$

$$\frac{\text{Area}(\Delta ADE)}{\text{Area}(\Delta BDE)} = \frac{\frac{1}{2} \times AD \times \cancel{EN}}{\frac{1}{2} \times BD \times \cancel{EN}}$$

$$\frac{\mathbf{Area}(\Delta \mathbf{ADE})}{\mathbf{Area}(\Delta \mathbf{BDE})} = \frac{\mathbf{AD}}{\mathbf{DB}} \text{ ---------- } \mathbf{(1)}$$

In $\Delta \mathbf{AED}$ and Δ **CDE**

Area(ΔAED) = $\frac{1}{2} \times AE \times DM$ ($\because$ Area of $\Delta = \frac{1}{2} \times b \times h$)

Area (ΔCDE) = $\frac{1}{2} \times EC \times DM$ ($\because$ Area of $\Delta = \frac{1}{2} \times b \times h$)

$$\frac{\text{Area}(\Delta AED)}{\text{Area}(\Delta CDE)} = \frac{\frac{1}{2} \times AE \times \cancel{DM}}{\frac{1}{2} \times EC \times \cancel{DM}}$$

$$\frac{\mathbf{Area}(\Delta \mathbf{AED})}{\mathbf{Area}(\Delta \mathbf{CDE})} = \frac{\mathbf{AE}}{\mathbf{EC}} \text{ -------- } \mathbf{(2)}$$

Area (ΔBDE) = Area (ΔCDE) ------ (3)

[$\because$ ΔBDE and ΔDEC stands on the same base DE and in between DE ∥ BC]

$\therefore$ **From** (1), (2) and (3)

$$\frac{\mathbf{AD}}{\mathbf{DB}} = \frac{\mathbf{AE}}{\mathbf{EC}}$$ **Hence proved**

2. Angle-Angle-Angle Criterion of Similarity of two triangles :

"If in two triangles, corresponding angles are equal, then their corresponding sides are in the same ratio (or proportion) and hence the two triangles are similar."

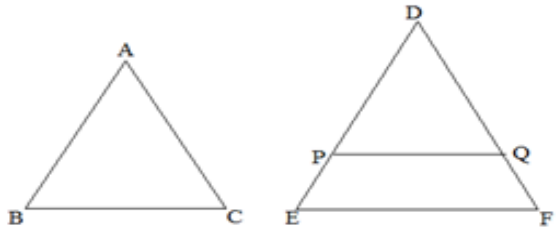

DATA : In ΔABC and ΔDEF

$\angle A = \angle D$, $\angle B = \angle E$, $\angle C = \angle F$

TO PROVE : $\Delta ABC \sim \Delta DEF$, $\frac{AB}{DE} = \frac{BC}{EF} = \frac{AC}{DF}$

CONSTRUCTION :

Cut DP = AB from DE and DQ=AC from DF and join PQ

PROOF: In ΔABC and ΔDPQ

$\angle BAC = \angle PDQ$ (∵ Data)

AB=DP , AC=DQ (∵ Construction)

$\therefore \Delta ABC \cong \Delta DPQ$ (∵ SAS Congruency rule)

$\angle ABC = \angle DPQ$, (∵ CPCT)

But $\angle ABC = \angle DEF$ (∵ Data)

$\Rightarrow \angle DPQ = \angle DEF$

$\therefore PQ \parallel EF$ (∵ Since corresponding angles are equal)

$\frac{DP}{DE} = \frac{PQ}{EF} = \frac{DQ}{DF}$ (∵By corolary of of BPT)

$\therefore$ $\mathbf{\frac{AB}{DE} = \frac{BC}{EF} = \frac{AC}{DF}}$ **(∵ $\Delta ABC \sim \Delta DEF$)**

Hence proved

3. Area of Similar triangles :

" The ratio of the areas of two similar triangles is equal to the square of the ratio of their corresponding sides."

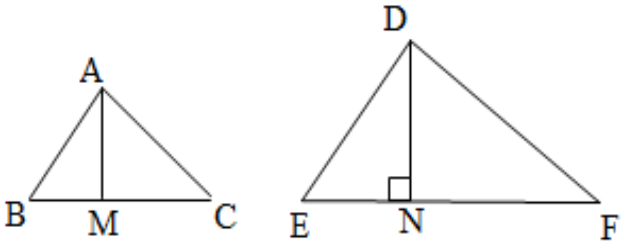

DATA : $\Delta ABC \sim \Delta DEF$

TO PROVE :

$$\frac{Area\Delta(ABC)}{Area\ \Delta(DEF)} = \left(\frac{AB}{DE}\right)^2 = \left(\frac{BC}{EF}\right)^2 = \left(\frac{AC}{DF}\right)^2$$

CONSTRUCTION : Draw AM⊥BC and DN⊥EF

PROOF: In ΔABC and ΔDEF

$$\mathbf{\frac{Area(\Delta ABC)}{Area(\Delta DEF)} = \frac{\frac{1}{2}\times BC\times AM}{\frac{1}{2}\times EF\times DN} = \frac{BC}{EF}\times\frac{AM}{DN}} \text{---- } \mathbf{(1)}$$

In ΔAMB and ΔDNE

$\angle ABM = \angle DEN$ (∵ Data)

$\angle AMB = \angle DNE = 90^0$ (∵ Construction)

$\therefore$ $\Delta ABM \sim \Delta DEN$ (∵AA Similarity criteria)

$\Rightarrow \frac{AM}{DN} = \frac{AB}{DE}$ ------- **(2)**

But, $\Delta ABC \sim \Delta DEF$ ($\because$ Given)

$\therefore \frac{AB}{DE} = \frac{BC}{EF} = \frac{AC}{DF}$ ----------**(3)**

$\Rightarrow \frac{AM}{DN} = \frac{BC}{EF}$ [From (2) and (3)]

(1) $\Rightarrow \frac{Area(\Delta ABC)}{Area(\Delta DEF)} = \frac{BC}{EF} \times \frac{AM}{DN} \Rightarrow \frac{BC}{EF} \times \frac{BC}{EF} = \left(\frac{BC}{EF}\right)^2$

$\frac{Area\Delta(ABC)}{Area\ \Delta(DEF)} = \left(\frac{AB}{DE}\right)^2 = \left(\frac{BC}{EF}\right)^2 = \left(\frac{AC}{DF}\right)^2$ [From(3)]

Hence proved

---

4. PYTHAGORAS THEOREM :

'In a right triangle, the square of the hypotenuse is equal to the sum of the square of the other two sides'

DATA : In ΔABC , $\angle ABC = 90^0$

TO PROVE: $AB^2 + BC^2 = AC^2$

CONSTRUCTION :

Draw BD $\perp$AC

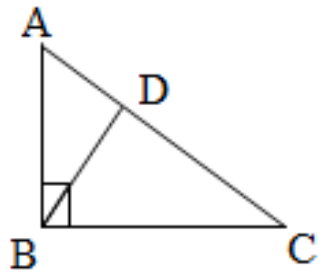

PROOF: In ΔADB and ΔABC

$\angle A = \angle A$ (Common angle)

$\angle ADB = \angle ABC = 90^0$ ($\because$ From Data and Construction)

$\therefore$ $\Delta ADB \sim \Delta ABC$ ($\because$ AA Similarity criteria)

$\therefore \frac{AD}{AB} = \frac{AB}{AC}$ $\Rightarrow$ **$AB^2 = AD \times AC$** ----------**(1)**

In ΔBDC and ΔABC

$\angle c = \angle c$ [Common angle]

$\angle BDC = \angle ABC = 90^0$ ($\because$ From Data and Construction)

$\therefore$ $\Delta BDC \sim \Delta ABC$ (AA Similarity criteria)

$\therefore \frac{DC}{BC} = \frac{BC}{AC}$ $\Rightarrow$ **$BC^2 = AC \times DC$** ---------- **(2)**

(1) + (2) $\Rightarrow$ $AB^2 + BC^2 = (AD \times AC) + (AC \times DC)$

$= AC(AD + DC)$

$= AC(AC)$ [$\because AD + DC = AC$]

$AB^2 + BC^2 = AC^2$

Hence proved

II. THEOREMS ON CIRCLES : 3 MARKS

1. THEOREM :-1

"The Lengths of tangents drawn from an external point to a circle are equal."

DATA : PQ and PR are the two tangents drawn from an external point P to a circle of centre O

TO PROVE : PQ= PR

CONSTRUCTION : Join OP, OQ and OR

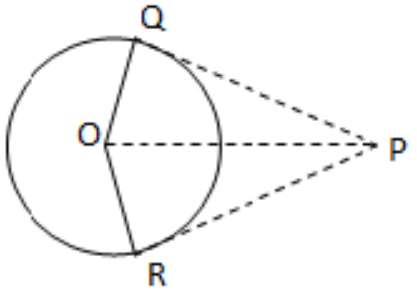

PROOF: In right ΔOQP and right ΔORP ,

OQ =OR [∵ Radius of the same circle]

OP = OP [∵ Common side]

$\angle OQP = \angle ORP$ [∵ Theorem 4.1]

$\therefore \Delta OQP = \Delta ORP$ [∵ RHS]

∴ **PQ= PR** [∵ CPCT]

2. THEOREM :-2

7. The tangent at any point of a circle is perpendicular to the radius through the point of contact.

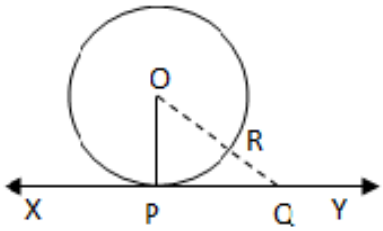

DATA : A circle with centre 'O' and tangent XY at a point 'P'.

TO PROVE : OP ⊥ XY

CONSTRUCTION : Take any point Q, other than P on the tangent XY and join OQ.

PROOF: Hence, Q is a point on the tangent XY, other than the point of contact P. So Q lies out side the circle. [∵ There is only one point of a contact to a tangent]

Let, OQ intersect the circle at R

∴ OP=OR [∵ Radius of the same circle]

Now, OQ=OR +RQ

⇒ OQ > OR

⇒ OQ > OP [∵ OP=OR]

∴ **OP** is the shortest distance to the tangent from the centre 'O'

∴ **OP ⊥ XY** [∵Perpendicular distance is always the shortest distance]

PART : 3 : MOST EXPECTED QUESTIONS :

UNIT-1 : ARITHEMETIC PROGRESSIONS

(1+ 2 + 3/4 = 6 / 7 Marks)

Arithemetic Progression (AP) :

An Arithemetic Progression is a list of numbers in which each term is obtained by adding a fixed number to the preceeding term except the first term.

The fixed number is called the 'Common difference' of the AP. It can be Positive, negative or zero.

Example : 1) 5, 10, 15, 20, 25, ... 2) 1, 3, 5, 7, 9, 11, ...

3) 4, 4, 4, 4,4, ... 4) -5, -4, -3, -2, -1, 0, 1, 2, 3, 4, 5, ...

Let denote the first term of an APby 'a_1' , Second term of an AP by 'a_2' , ...

n^{th} term of an AP by 'a_n' and Common difference of an AP by 'd'

Then AP becomes : a_1, a_2, a_3, a_4, ... a_n

Common difference of an AP : $a_2 - a_1 = a_3 - a_2 = a_4 - a_3 = \ldots\ldots a_n - a_{n-1} = d$

The General form of an AP : a, a+d, a+2d, a+3d, a+4d, ...

Finite AP :

In any AP, there are finite number of terms. Such an AP is called finite AP. This type of AP has a last term.

Ex: 1) 1, 2, 3, 4, 5, 6, 7 2) 5, 10, 15, 20, 25, ...150.

Infinite AP :

In any AP, there are infinite number of terms. Such an AP is called infinite AP. This type of AP do not have a last term.

Ex: 1) 1, 2, 3, 4, 5, 6, 7 ,. . . . . 2) 5, 10, 15, 20, 25, ...

Problems :

I. Write first four terms of the AP, when first term 'a' and the common difference 'd' are given as follows :

1) a = 5, d= 3

Ans : First four AP's are : First term = a_1 = a = 5

Second term = a_2 = a+d = 5+3 = 8

Third term = a+2d =5+2(3) = 5 + 6 =11

Fourth term = a+3d = 5+3(3) = 5 + 9 = 14

Practice Problems :

1) a = 4 , d = 5 2) a=-2 , d= 3 3) a=4, d= -3 4) a =10, d = 10 5) a=-1, d=$\frac{1}{2}$

---

n^{th} term of an AP : The nth term a_n of the AP with first term 'a' and the common difference 'd' is given

by **$a_n = a + (n-1)d$**

a_n is also called the general form of the AP. If there are 'm' terms in the AP, then a_m represents the last term which some time also denoted by 'l'.

So, $l = a + (n-1)d$

Example Problems :

1) Find the 10th term of the AP : 2, 7, 12, ...

Ans : Here, $a = a_1 = 2$, $a_2 = 7$, $d= a_2 – a_1 = 7 – 2 = 5$, n = 10

we have, $a_n = a + (n-1)d$

$a_{10} = 2 + (10-1) = 2+ 9(5) = 2+ 45 = 47$

∴ The 10th term of thegiven AP = 47

Practice Problems :

1) **Find the 15th term of the AP : 5, 10, 15, ...**

2) **Find the 27th term of the AP : 2, 6, 10, 14, 18 . . . . . .**

---

2)Determine the AP whose 3rd term is 5 and the 7th term is 9.

Ans : Here, **3rd term of the AP = 5**

we have, $a_n = a + (n-1)d$

n=3, $a_3 = a + (3-1)d = 5$

$a + 2d = 5$ . . . . . .(1)

7rd term of the AP = 9

$a_n = a + (n-1)d$

n=7 , $a_7 = a + (7-1)d = 9$

$a + 6d = 9$. . . . . .(2)

Equation (2) – (1)

$a + 6d = 9$. . . . . .(2)

(-) $\underline{a + 2d = 5}$ . . . . . .(1)

$0 +4d = 4$

$d = \frac{4}{4} = 1$ **∴ d = 1**

Substitute the value of d=1, in Eqn (1)

$a + 2d = 5$ . . . . . .(1)

$a +2(1) = 5 \Rightarrow a + 2 = 5$

$a = 5 – 2 =3$

∴ a = 3

Hence,

the required AP when a = 3 and d = 1

a, a+d, a+2d, a+3d, ...

3, 3+1, 3+2(1), 3+3(1), ...

3, 4, 5, 6, ...

3) Find the 31st term of an AP whose 11th term is 38 and the 16th term is 73.

Ans : Here, 11th term of the AP = 38

we have, $a_n = a + (n-1)d$

n=11, $a_{11} = a + (11-1)d = 38$

$a + 10d = 38$ . . . . . .(1)

16th term of the AP = 73

$a_n = a + (n-1)d = 73$

n=16 , $a_{16} = a + (16-1)d = 73$

$a + 15d = 73$. . . . . .(2)

Eqn (2) – (1) $a + 15d = 73$. . . . . .(2)

$\underline{a + 10d = 38}$ . . . . . .(1)

$0 + 5d = 35$

$d = \frac{35}{5} = 7$ **∴ d = 7**

Substitute the value of d=7, in (1) :

$a + 10d = 38$. . . . . .(1)

$a + 10(7) = 38 \Rightarrow a + 70 = 38$

$a = 38 - 70 = -32$

∴ a = -32

31st term of the AP :

$a_n = a + (n-1)d$

$a_{31} = -32 + (31-1)7 \Rightarrow a_{31} = -32 + (30)7$

$= -32 + 210 = 178$

∴ The 31st term of the AP is 178.

Practice Problems :

1) The 17th term of an AP exceeds its 10th term by 7. Find the commom difference.

2) Determine AP whose third term is 16 and the 7th term is exceeds the 5th term by 12.

3) An AP Consists of 50 terms of which 3rd term is 12 and the last term is 106. Find the 29th term

4) How many two digits numbers are divisible by 3?

Ans :

The list of two digit numbers divisible by 3 is : 12, 15, 18, 21, 24, 27, ...99.

Here, a = 12, d = 15 - 12 = 3, $a_n = 99$

$a_n = a + (n-1)d$

$99 = 12 + (n - 1)3$

$99 = 12 + 3n - 3 \Rightarrow 99 = 9 + 3n$

$3n = 99 - 9 \Rightarrow 3n = 90 \Rightarrow n = \frac{90}{3} = 30$

So, there are 30 two-digit numbers divisible by 3

5) How many two digits numbers are divisible by 5?

Ans : The list of two –digit numbers divisible by 5 is : 10, 15, 20, 25, 30, 35, ...95

Here, a = 10, d = 15 - 10 = 5 $a_n = 95$

$a_n = a + (n-1)d$

$95 = 10 + (n - 1)5$

$95 = 10 + 5n - 5$

$95 = 5 + 5n$

$5n = 95 - 5 \Rightarrow 5n = 90 \Rightarrow n = \frac{90}{5} = 18$

So, there are 18 two-digit numbers divisible by 5

Practice problems :

1) How many three - digits numbers are divisible by 7?

2) How many multiples of 4 lie between 10 and 250?

6) In a flower bed, there are 23 rose plants in the first row, 21 in the second, 19 in the third, and so on. There are 5 rose plants in the last row How many rows are there in the flower bed?

Ans : The number of rose Plants in the 1st, 2nd, 3rd, ... last rows are :

23, 21, 19, ... , 5

Here, a = 23, d = 21 – 23 = -2 , last row a_n= l = 5

Let the number of rows in the flower bed = n

$a_n = a + (n-1)d$

$5 = 23 + (n – 1)(-2)$

$5 = 23 -2n + 2$

$5 = 25 – 2n$

$2n = 25 – 5$

$n = \frac{20}{2} \Rightarrow$ **n = 10**

So, there are 10 rows in the flower bed.

7) Subba Rao started work in 1995 at an annual salry of Rs.5000 and received an increment of Rs 200 each year. In which year did his income reach Rs.7000?

Ans : Subba RaoAnnual salry =Rs.5000

Incriment rate for each year = 200

It forms an AP is :

5000, 5200, 5400, 5600, ... ,7000

Here, a = 5000, d = 200, a_n = l = 7000, n = ?

$a_n = a + (n-1)d$

$7000 = 5000 + (n – 1)200$

$7000 = 5000 + 200n – 200$

$7000 = 4800 + 200n \Rightarrow 7000 – 4800 = 200n$

$2200 = 200n \Rightarrow n = \frac{2200}{200} \Rightarrow$ **n = 11**

So, 11th year that means , In 2005 his salry reaches

Rs.7000

8) The sum of the 4th and 8th terms of an AP is 24 and the sum of the 6th and 10th term is 44. Find the First three terms of the AP.

Ans :

The sum of the 4th and 8th terms of an AP =24

$a_4 + a_8 = 24$

$a + 3d + a + 7d = 24$

$2a + 10d = 24$ (Dividing through out by 2)

$a + 5d = 12$ . . . . . (1)

The sum of the 6th and 10th terms of an AP = 44

$A_6 + a_{10} = 24$

$a + 5d + a + 9d = 44$

$2a + 14d = 44$ (Dividing through out by 2)

$a + 7d = 22$ . . . . . (2)

Eqn (2) – Eqn (1) $\Rightarrow$

$a + 7d = 22$ . . . . . (2)

$\underline{a + 5d = 12}$ . . . . . (1)

$0 + 2d = 10 \Rightarrow d = \frac{10}{2} = 5$ $\therefore$ **d = 5**

Substitute the Value of d = 5 in (1)

Eqn (1) $\Rightarrow a + 5d = 12$ . . . . . (1)

$a + 5(5) = 12$

$a + 25 = 12$

$a = 25 – 12 = 13$ $\therefore$ **a = 13**

The First three terms of the AP are :

$a_1 = 13$,

$a2 = a + d = 13 + 5 = 18$

$a3 = a + 2d = 13 + 2(5) = 13 + 10 = 23$

The First three terms of the AP are : 13, 18, 23

Sum of First 'n' Terms of an AP :

1) The sum of First 'n' terms of an AP is given by : $S = \frac{n}{2}[2a + (n-1)d]$

2) If 'l' is the last term of the finite AP, say n^{th} term, then the sum of all terms of the AP is given by : $S = \frac{n}{2}[a + l]$

3) The sum of first 'n' positive integers is given by : $S_n = \frac{n(n+1)}{2}$

Examples :

1) Find the sum of the following AP : **2, 7 , 12, ... to 10 terms.** **Ans :** a = 2 , d = 7 – 2 = 5, Number of terms n = 10 Sum of the AP = Sn =? $S_n = \frac{n}{2}[2a + (n-1)d]$	$S_{10} = \frac{10}{2}[2(2) + (10-1)5]$ $= 5[4 + (9)5]$ $= 5[4 + 45]$ $= 5(49) = 245$ **$S_{10} = 245$**

Practice problem :

1) Find the sum of the first 22 terms of the AP : 8, 3, -2, ...

Examples :

2) If the sum of the first 14 terms of an AP is 1050 and its first term is 10, find the 20th term. **Ans :** Given : $S_{14} = 1050$, n = 14, a = 10, a_{20} =? $S_n = \frac{n}{2}[2a + (n-1)d]$ $S_{14} = \frac{14}{2}[2(10) + (14-1)d]$ $1050 = 7(20 + 13d)$ $\frac{1050}{7} = 20 + 13d$ $150 = 20 + 13d$ $13d = 150 - 20 \Rightarrow d = \frac{130}{13} = 1$ **∴ d =10** **20th term of the AP :** $a_{20} = a + 19d$ $= 10 + 19(10) = 10 + 190 = 200$ **∴ 20th term of the AP = 200**	**3) How many terms of the AP : 24, 21, 18, ... must be taken so that their sum is 78?** **Ans :** Given AP is : 24, 21, 18, ... Here, a = 24, d = 21 – 24 = -3 , S_n = 78, n = ? $S_n = \frac{n}{2}[2a + (n-1)d]$ $78 = \frac{n}{2}[2(24) + (n-1)(-3)]$ $78 \times 2 = n(48 - 3n + 3)$ $156 = n(51 - 3n) \Rightarrow 156 = 51n - 3n^2$ $3n^2 - 51n + 156 = 0$ (Dividing through out by 3) $n^2 - 17n + 52 = 0$ But, $52n^2 = -13n \times -4n$ $n^2 - 13n - 4n + 52 = 0$ $n(n-13) - 4(n-13) = 0$ $(n-13)(n-4) = 0$ $n - 13 = 0$ **OR** $n - 4 = 0$ $n = 13$ $n = 4$ Both value of 'n' are admissible. So, the number of terms is either 4 or 13

Practice problem :

1) How many terms of the AP : 9, 17, 25, ... must be taken to give a sum of 636?

4)The first term of an AP is 5, the last term is 45 and the sum is 400. Find the number of terms and the common difference.

Ans : Given :

$a = 5, \quad l = 45, \quad S_n = 400, \quad n = ?, \quad d = ?$

$S = \frac{n}{2}[a + l]$

$400 = \frac{n}{2}[5 + 45]$

$400 = \frac{n}{2}[50]$

$400 = 25n \Rightarrow n = \frac{400}{25} = 16 \quad \therefore \mathbf{n = 16}$

$l = a + (n-1)d$

$45 = 5 + (16 - 1)d$

$45 = 5 + 15d$

$45 - 5 = 15d$

$40 = 15d \Rightarrow d = \frac{40}{15} = \frac{8}{3} \quad \therefore \mathbf{d = \frac{8}{3}}$

∴ The number of terms 'n' = 16

∴ common difference 'd' = $\frac{8}{3}$

5)The first and last terms of an AP are 17 and 350 respectively. If the common difference is 9, how many terms are there and what is their sum?

Ans : First term of an AP = a = 17

Last term of an AP = l= 350

Common difference d =9 ,

Number of terms = n?, Sum of the AP = Sn =?

$l = a + (n - 1)d$

$350 = 17 + (n - 1)9$

$350 = 17 + 9n - 9 \Rightarrow 350 = 8 + 9n$

$9n = 350 - 8 = 342 \Rightarrow n = \frac{342}{9} = 38$

$\therefore n = 38$

$S_n = \frac{n}{2}[a + l]$

$= \frac{38}{2}[17 + 350] = 19(367) = 6973$

$\mathbf{S_n = 6973}$

6) Find the sum of first 22 terms of an AP in which d = 7 and 22nd term is 149.

Ans : Given : d = 7 $\quad S_{22} = ?$

22nd term = 149 ⇒ $a_{22} = a + 21d = 149$

$a + 21(7) = 149$

$a + 147 = 149$

$a = 149 - 147 = 2$

$\therefore \mathbf{a = 2}$

$S_{22} = \frac{n}{2}[2a + (n - 1)d]$

$= \frac{22}{2}[2(2) + (22 - 1)7]$

$= 11[4 + 21(7)]$

$= 11[4 + 147] = 11(151) = 1661$

$\therefore \mathbf{S_{22} = 166}$

7) Find the sum of first 51terms of an AP whose 2nd and 3rd terms are 14 and 18 respectively.

Ans : 2nd term of an AP = $a_2 = 14$

3rd term of an AP = $a_3 = 18$

$d = a_3 - a_2 = 18 - 14 = 4 \quad \therefore \mathbf{d = 4}$ **,**

$n = 51, \quad S_{51} = ?$

$a_2 = a + d \Rightarrow 14 = a + 4$

$\Rightarrow 14 - 4 = a \Rightarrow 10 = a \quad \therefore \mathbf{a = 10}$

$S_n = \frac{n}{2}[2a + (n - 1)d]$

$S_{51} = \frac{51}{2}[2(10) + (51 - 1)4]$

$= \frac{51}{2}[20 + (50)4]$

$= \frac{51}{2}[20 + 200] = \frac{51}{2}[220] = 51(110)$

$\mathbf{S_{51} = 5610}$

UNIT-2 : PAIR OF LINEAR EQUATIONS :

[1 + 2 + 3 = 6 MARKS]

If a pair of linear equation is given by $a_1x+b_1y+c_1=0$, then $a_2x+b_2y+c_2=0$, then the following situations can arise.

1) $\frac{a_1}{a_2} \neq \frac{b_1}{b_2}$: In this case , the pair of linear equation is consistent.

2) $\frac{a_1}{a_2} = \frac{b_1}{b_2} \neq \frac{c_1}{c_2}$: In this case , the pair of linear equation is inconsistent.

3) $\frac{a_1}{a_2} = \frac{b_1}{b_2} = \frac{c_1}{c_2}$: In this case , the pair of linear equations dependent and consistent.

Example : **1. Find the solution for the pair of linear linear equations by elemination method : x + y =14 and x – y =4**

[June :2019]

Ans : x + y = 14 ----- (1)

x – y = 4------ (2)

Eqn (1) – Eqn(2)

x + y = 14 ----- (1

x – y = 4------ (2)

0 + 2y = 10

y = $\frac{10}{2}$ = 5 **∴ y = 5**

Substitute the value of 'y' in(1)

x + y = 14 ----- (1)

x + 5 = 14

x = 14 – 5 = 9 **∴ x = 9**

∴ x = 9 and y = 5

2. Find the solution for the pair of linear linear equations by elemination method : x + y = 5 and 2x - 3y = 5

[March/April : 2019]

Ans : x + y = 5 ----- (1) × 2

2 x – 3y = 5------ (2) × 1

2x + 2 y = 10 ----- (3)

2 x – 3y = 5------ (4)

Eqn (3) – Eqn(4)

2 x + 2y = 10 ----- (1

2 x – 3 y = 5------ (2)

0 + 5 y = 5 y = $\frac{5}{5}$ = 1 **∴ y = 1**

Substitute the value of 'y' in(1)

x + y = 5 ----- (1)

x +1 = 5

∴ x = 5 -1 = 4 **∴ x = 4**

∴ x = 4 and y = 1

Practice Problems :

1. Solve the following pair of linear linear equations by elemination method :

10 x +3 y = 75 and 6x - 5y = 11 **[Kseeb model paper -1 : 2019]**

1. Solve the following pair of linear linear equations by elemination method :

1) 3x + 4y = 10 and 2x – 2 y =2	5) 3x – y = 3 and 9x – 3y = 9
2) 3x – 5y – 4 = 0 and 9x = 2y + 7	6) 3x + 2y – 7 = 0 and 4x + y – 6 = 0
3) 3x + 4y = -6 and 3x – y = 9	7) 2x – y = 2 and x + 3y = 15
4) 2x + y = 5 and 3x + 2y = 8	8) x + y = 9 an d 8x – y = 0

3 - MARKS QUESTIONS :

1) 10 years hence, the age of x will be 2 times that of age of y, 10 years ago, the age of x was six times that of age of y. What are their present ages?

[Kseeb Model paper -2 :2019]

Ans : Let the age of 'x' be 'a'

and the age of 'y' be 'b'

According to questions, 10 years from now

a + 10 = 2(b + 10)

a + 10 = 2b + 20

a – 2b = 20 – 10

a – 2b =10 ----------(1)

10 years ago,

a - 10 = 6(b - 10)

a - 10 = 6b - 60

a – 6b = -60 +10

a – 6b =- 50 ---------(2)

Eqn (1) - (2)

a – 2b = 10 ----------(1)

a – 6b = - 50 ---------(2)

4b = 60 b = $\frac{60}{4}$= 15

Substitute the value of 'b' in (1)

a – 2b = 10 ----------(1)

a – 2(15) = 10

a – 30 =10

a = 10 + 30 = 40

The present age of x = a = 40 years

The present age of y = b = 15 years

2) A fraction becomes $\frac{8}{11}$, if 3 is added to both the numerator and denominator, also if 3 is subtracted from the numerator and denominator becomes $\frac{2}{5}$. Find the fraction.

Ans : **[Kseeb Model paper -2 :2019]**

Let $\frac{x}{y}$ be the fraction , where x and y are positive integers.

Given, $\frac{x+3}{y+3} = \frac{8}{11}$ and $\frac{x-3}{y-3} = \frac{2}{5}$

(x+3)11= 8(y+3) (x -3)5 = 2(y – 3)

11x +33 = 8y +24 5x – 15 = 2y – 6

11x – 8y =24 – 33 5x – 2y = - 6 +15

11x – 8y = - 9 ----(1) 5x – 2y = 9-----(2)

Multiply eqn (2) by 4

5x – 2y = 9-----(2) × 4

20x – 8y = 36 ----------(3)

Eqn (1) - (3) 11x – 8y = - 9 ----------(1)

20x – 8y = 36 ----------(3)

-9x + 0 = -45

x = $\frac{-45}{-9}$ = 5 ∴ **x = 5**

Put the value of x in (2)

5x – 2y = 9-----(2)

5(5) – 2 y = 9

- 2y = 9 - 25

y = $\frac{-16}{-2}$ = 8 ∴ **y =**

∴ The fraction $\frac{x}{y} = \frac{5}{8}$

or (x, y)= (5, 8)

3) Five years ago, Nuri was thrice as old as Sonu. Ten years later, Nuri will be twice as old as Sonu . How old are Nuri and Sonu?

Ans : Nuri present age be 'x'
Sonu present age be 'y'

Fiveyear ago,

Nuri age = x - 5

Sonu age = y - 5

According to Problem

$(x - 5) = 3(y - 5) \Rightarrow x - 5 = 3y - 15$

$x - 3y = -15 + 5$

$x - 3y = -10$ . .....(1)

After ten years,
Nuri age = x +10
Sonu age = y +10
According to Problem

$(x + 10) = 2(y + 10)$

$x + 10 = 2y + 20$

$x - 2y = 20 - 10$

$x - 2y = 10$ . . . . . .(2)

Eqn (2) – (1)

$x - 2y = 10$ . . . . . .(2)

$\underline{x - 3y = -10}$ . . . . . .(1)

$0 + y = 2 \quad \therefore \mathbf{y = 20}$

Substitute the value of 'y' in (1)

$x - 3y = -10$ . .....(1)

$x - 3(20) = -10$

$x - 60 = -10$

$x = -10 + 60 = 50$

$\therefore \mathbf{x = 50}$

Nuri present age be 'x' = 50years
Sonu present age be 'y' = 20 years

4**) The area of a rectanle gets reduced by 9 sq.units, if its length is reduced by 5 units and breadth is increased by 3 units. If we increases the length by 3 units and breadth by 2 units, the area increased by 67 sq. units. Find the dimension of the rectangle.**

Ans : Length of the rectangle = x and

Breadth of the rectangle = y

Area of the rectangle = l × b = x × y = xy

According to problem,

$(x - 5)(y + 3) = xy - 9$

$xy - 5y + 3x - 15 = xy - 9$

$3x - 5y = -9 + 15$

$3x - 5y = 6$

$3x = 6 + 5y$

$x = \frac{6+5y}{3}$. . . . . .(1)

According to problem,

$(x + 3)(y + 2) = xy + 67$

$xy + 3y + 2x + 6 = xy + 67$

$2x + 3y = 67 - 6$

$2x + 3y = 61$ . .. .(2)

Substitute the value of 'x' in (2)

$2x + 3y = 61$ . .. .(2)

$2\left[\frac{6+5y}{3}\right] + 3y = 61$

$\frac{12+10y}{3} + 3y = 61$

$\frac{12+10y+9y}{3} = 61$

$12 + 19y = 61 \times 3$

$12 + 19y = 183$

$19y = 183 - 12$

$19y = 171$

$y = \frac{171}{19} = 9 \quad \therefore \mathbf{y = 9}$

Substitute the value of 'y' in (1)

$x = \frac{6+5y}{3}$. . . . . .(1)

$x = \frac{6+5(9)}{3} = \frac{6+45}{3} = \frac{51}{3} = 17 \quad \therefore \mathbf{x = 17}$

Length of the rectangle = x = 17 m

Breadth of the rectangle = y =9m

UNIT-3. COORDINATE GEOMETRY :

[2 + 3 = 5 MARKS]

I. PROBLEMS ON DISTANCE FORMULA : [2-Marks Questions]

PQ = $\sqrt{(x_2 - x_1)^2 + (y_2 - y_1)^2}$

1. Find the distance between the points A(8,-3) and B(0 ,9) by using distance formula.

[kseeb sample paper-1 :2019]

A(x_1,y_1) = **(8,-3)**

B(x_2, y_2) = **(0,9)**

x_1	y_1	x_2	y_2
8	-3	0	9

Distance between the points AB $= \sqrt{(x_2 - x_1)^2 + (y_2 - y_1)^2}$

$= \sqrt{(0-8)^2 + [9-(-3)]^2}$

$= \sqrt{(-8)^2 + [9+3)]^2}$

$= \sqrt{(-8)^2 + (12)^2}$

$= \sqrt{64 + 144} = \sqrt{208} = \sqrt{16 \times 13} = 4\sqrt{13}$

∴ **Distance between the points AB =** $4\sqrt{13}$ **Units**

Practice Questions on Distance formula :

1). Find the distance between the points A(2, 3)and B(4,1) by using distance formula.

2). Find the distance between the points A(-5, 7)and B(-1, 3) by using distance formula

3). Find the distance between the points A(1, 7)and B(4, 2) by using distance formula

4). Find the distance between the points A(-1, -1)and B(-4, 4) by using distance formula

5). Find the distance between the points A(3, 2)and B(-2, -3) by using distance formula

3-Marks questions on Distance formula :

1) Find the perimeter of the triangle whose vertices are (-2, 1), (4, 6) and (6, 3)

Perimeter of the triangle ABC = AB+BC+CA **[kseeb sample paper- 2: 2019-20]**

Distance between the points AB $= \sqrt{(x_2 - x_1)^2 + (y_2 - y_1)^2}$

$A(x_1, y_1)$ =(-2,1

$B(x_2, y_2)$ =(4,6)

x_1	y_1	x_2	y_2
-2	1	4	6

$= \sqrt{[4-(-2)]^2 + (6-1)^2}$

$= \sqrt{(4+2)^2 + (5)^2}$

$= \sqrt{(6)^2 + (5)^2}$

$= \sqrt{36 + 25}$

AB = $\sqrt{61}$ **Units**

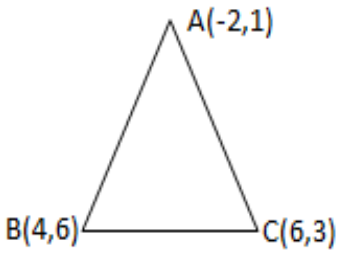

Distance between the points BC = $\sqrt{(x_2 - x_1)^2 + (y_2 - y_1)^2}$

$B(x_1, y_1) = (4, 6)$ $= \sqrt{(6-4)^2 + [3-(-6)]^2}$

$C(x_2, y_2) = (6, 3)$ $= \sqrt{(2)^2 + (3+6)^2}$

x_1	y_1	x_2	y_2
4	6	6	3

$= \sqrt{(2)^2 + (9)^2}$

$= \sqrt{4 + 81}$

BC = $\sqrt{85}$ Units

Distance between the points CA = $\sqrt{(x_2 - x_1)^2 + (y_2 - y_1)^2}$

$C(x_1, y_1) = (6, 3)$ $= \sqrt{(-2-6)^2 + (1-3)^2}$

$A(x_2, y_2) = (-2, 1)$ $= \sqrt{(-8)^2 + (-2)^2}$

x_1	y_1	x_2	y_2
6	3	-2	1

$= \sqrt{64 + 4} = \sqrt{68} = \sqrt{4 \times 17}$

CA = $2\sqrt{17}$ Units

Perimeter of the triangle ABC = AB+BC+CA

∴ Perimeter of the triangle AB = ($\sqrt{61} + \sqrt{85} + 2\sqrt{17}$) Units

---

Practice Questions : [3-Marks]:

---

1) Check whether (5,-2), (6,4) and (-2,-11) are the vertices of an isosceles triangle.

[Hints : Triangle that has two sides of equal length is called as isosceles triangle]

2) Find the perimeter of a triangle with vertices (0,4), (0,0) and (3,0.)

3) Prove that the points (3,0), (6,4) and (-1,3)are the vertices of a right angled isosceles triangle. [Hints : using the pythagoroas theorem $AC^2 = AB^2 + BC^2$]

4) (1,-1), (0,4) and (-5,3) are vertices of a triangle.Check whether it is a scalene triangle, isosceles triangle or an equilateral triangle.

5) Do the points (3,2), (-2,-3) and (2,3) form a triangle?so, name the type of triangle formed.

---

1).Show that the points (1,7), (4,2), (-1,-1) and (-4,4) are the vertices of a square.

Ans : Distance between the points AB = $\sqrt{(x_2 - x_1)^2 + (y_2 - y_1)^2}$

$A(x_1, y_1) = (1, 7)$ $= \sqrt{(4-1)^2 + (2-7)^2}$

$B(x_2, y_2) = (4, 2)$ $= \sqrt{(3)^2 + (-5)^2}$

x_1	y_1	x_2	y_2
1	7	4	2

$= \sqrt{9 + 25}$

∴ AB = $\sqrt{34}$ Units

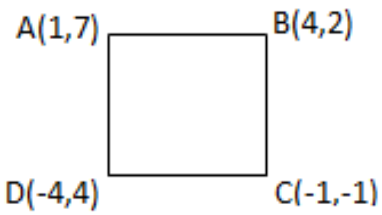

Distance between the points BC = $\sqrt{(x_2 - x_1)^2 + (y_2 - y_1)^2}$

$B(x_1, y_1) = (4, 2)$ $= \sqrt{(-1-4)^2 + (-1-2)^2}$

$C(x_2, y_2) = (-1,-1)$ $= \sqrt{(-5)^2 + (-3)^2}$

$= \sqrt{25 + 9}$

x_1	y_1	x_2	y_2
4	2	-1	-1

∴ **BC = $\sqrt{34}$ Units**

Distance between the points CD = $\sqrt{(x_2 - x_1)^2 + (y_2 - y_1)^2}$

$C(x_1, y_1) = (-1,-1)$ $= \sqrt{[-4-(-1)]^2 + [4-(-1)]^2}$

$D(x_2, y_2) = (-4,4)$ $= \sqrt{(-4+1)^2 + (4+1)^2}$

$= \sqrt{(-3)^2 + (5)^2}$

$= \sqrt{9 + 25}$

x_1	y_1	x_2	y_2
-1	-1	-4	4

∴ **CD = $\sqrt{34}$ Units**

Distance between the points DA = $\sqrt{(x_2 - x_1)^2 + (y_2 - y_1)^2}$

$D(x_1, y_1) = (-4,4)$ $= \sqrt{[1-(-4)]^2 + (7-4)^2}$

$A(x_2, y_2) = (1, 7)$ $= \sqrt{(1+4)^2 + (3)^2}$

$= \sqrt{(5)^2 + (3)^2}$

$= \sqrt{25 + 9}$

x_1	y_1	x_2	y_2
-4	4	1	7

∴ **DA = $\sqrt{34}$ Units**

Diagonal AC = $\sqrt{(x_2 - x_1)^2 + (y_2 - y_1)^2}$

$A(x_1, y_1) = (1, 7)$ $= \sqrt{(-1-1)^2 + (-1-7)^2}$

$C(x_2, y_2) = (-1, -1)$ $= \sqrt{(-2)^2 + (-8)^2}$

$= \sqrt{4 + 64}$

x_1	y_1	x_2	y_2
1	7	-1	-1

∴ **Diagonal AC** = $\sqrt{68}$ **Units**

Diagonal BD = $\sqrt{(x_2 - x_1)^2 + (y_2 - y_1)^2}$

$B(x_1, y_1) = (4, 2)$ $= \sqrt{(-4-4)^2 + (4-2)^2}$

$D(x_2, y_2) = (-4, 4)$ $= \sqrt{(-8)^2 + (2)^2}$

$= \sqrt{64 + 4}$

x_1	y_1	x_2	y_2
4	2	-4	4

∴ **Diagonal BD** = $\sqrt{68}$ **Units**

since, Sides AB=BC=CD=DA and Diagonals AC=BD

All four sides of the quadrilateral ABCD are equal and its diagonals are equal

∴ ABCD is asquare.

Practice Questions :

1) Name the type of quadrilateral formed, if any, by the following points, and give reasons for your answer.

i) (-1, -2), (1, 0), (-1, 2),(-3, 0)

ii) (-3, 5), (3, 1), (0, 3),(-1, -4)

iii) (4, 5), (7, 6), (4, 3), (1, 2)

The distance of a points P(x, y) from the origine O(0, 0) is OP = $\sqrt{x^2 + y^2}$

1. Find the distance between the points (0,0) and (36, 15)

P(36, 15)=(x, y) OP = $\sqrt{x^2 + y^2} = \sqrt{36^2 + 15^2}$

$= \sqrt{1296 + 225}$

$= \sqrt{1521} = 39$

OP = 39

2. Find the distance of a point (3, 4) from he origine **[April -2019 : 2Marks]**

Example 1: Three consecutive vertices of a parallelogram are A(1, 2), B(2, 3) and C(8, 5). Find fourth vertices. **[3- Marks : kseeb sample paper - 2]**

Let D coordinates as D(x,y)

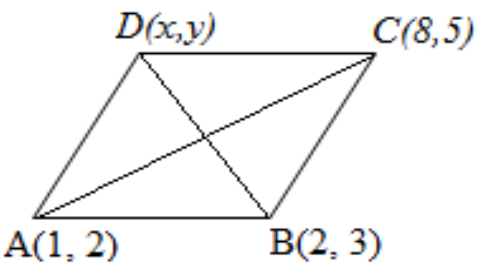

Diagonals of the parallelogram bisects each other

Mid point of AC = Mid point of BD

$$\left(\frac{x_1 + x_2}{2}, \frac{y_1 + y_2}{2}\right) = \left(\frac{x_1 + x_2}{2}, \frac{y_1 + y_2}{2}\right)$$

$A(x_1, y_1) = (1, 2)$ $B(x_1, y_1) = (2, 3)$

$C(x_2, y_2) = (8,5)$ $D(x_2, y_2) = (x, y)$

x_1	y_1	x_2	y_2
1	2	8	5

x_1	y_1	x_2	y_2
2	3	x	y

$$\left(\frac{1+8}{2}, \frac{2+5}{2}\right) = \left(\frac{2+x}{2}, \frac{3+y}{2}\right)$$

$$\left(\frac{9}{2}, \frac{7}{2}\right) = \left(\frac{2+x}{2}, \frac{3+y}{2}\right)$$

On comparing both sides

$\frac{9}{2} = \frac{2+x}{2}$, $\frac{7}{2} = \frac{3+y}{2}$

$\cancel{2} \times \frac{9}{\cancel{2}} = 2 + x$, $\cancel{2} \times \frac{7}{\cancel{2}} = 3+y$

$9 = 2 + x$, $7 = 3 + y$

$x = 9 - 2 = 7$, $y = 7 - 3 = 4$

x = 7 and **y = 4**

∴ **Fourth vertices are D(x, y) = D(7, 4)**

2.If (1,2), (4,y) , (x,6) and (3,5) are the vertices of a parallelogram taken in order,find x and y

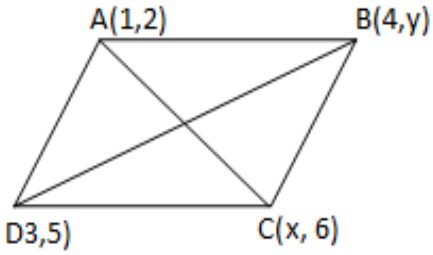

Ans :

Let A(1,2), B(4,y) , C(x,6) and D(3,5) are the vertices of the parallelgram ABCD.

In the parallelogram ABCD diagonals AC and BD bisects each other.

So the coordinates of both AC and BD are same,

∴ Mid point of AC = Mid point of BD

$$\left(\frac{x_1+x_2}{2}, \frac{y_1+y_2}{2}\right) = \left(\frac{x_1+x_2}{2}, \frac{y_1+y_2}{2}\right)$$

$A(x_1, y_1) = (1, 2)$

$C(x_2, y_2) = (x, 6)$

x_1	y_1	x_2	y_2
1	2	x	6

$B(x_1, y_1) = (4, y)$

$D(x_2, y_2) = (3, 5)$

x_1	y_1	x_2	y_2
4	y	3	5

$$\left(\frac{1+x}{2}, \frac{2+6}{2}\right) = \left(\frac{4+3}{2}, \frac{y+5}{2}\right)$$

$$\left(\frac{1+x}{2}, \frac{8}{2}\right) = \left(\frac{7}{2}, \frac{y+5}{2}\right) \Rightarrow \left(\frac{1+x}{2}, 4\right) = \left(\frac{7}{2}, \frac{y+5}{2}\right)$$

On comparing both sides

$\frac{1+x}{2} = \frac{7}{2}$, $4 = \frac{y+5}{2}$

$1+x = \cancel{2} \times \frac{7}{\cancel{2}}$, $4 \times 2 = y+5$

$1 + x = 7$, $8 = y + 5$

$x = 7 - 1$, $y = 8 - 5$

$x = 6$, **$y = 3$**

Practice question :

1)If the point A(6,1), B(8,2), C(9,4) and D(p,3) are the vetrices of a parallelogram, taken in order find the value of "p".

---

3. Find the coordinats of point A, where AB is diameter of a circle whose centre is (2,-3) and B is (1, 4)

Ans : The centre of the circle is the mid point of the diameter.

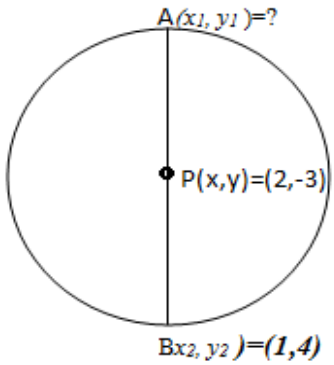

P(x,y)=(2,-3),

$A(x_1, y_1)=?$,

$B((x_2, y_2) =(1, 4)$

x_1	y_1	x_2	y_2
?	?	1	4

P(x, y) = $\left(\frac{x_1+x_2}{2}, \frac{y_1+y_2}{2}\right)$

$P(2, -3) = \left(\frac{x_1+1}{2}, \frac{y_1+4}{2}\right)$

On comparing both sides

$2 = \frac{x_1+1}{2}$, $-3 = \frac{y_1+4}{2}$

$2 \times 2 = x_1 + 1$, $-3 \times 2 = y_1 + 4$

$4 = x_1+1$, $-6 = y_1 +4$

$x_1 = 4-1 = 3$, $y_1 = -6-4 = -10$

$x_1 = 3$, $y_1 = -10$

∴The coordinates of A are (3, -10)

---

3. Find the value of 'y' for which the distance between the points P(2, -3) and Q(10, y) is 10 units.

Ans : $P(2, -3)= (x_1, y_1)$

$Q(10, y)= (x_2, y_2)$

x_1	y_1	x_2	y_2
2	-3	10	y

Distance between yhe points P and Q is=10

Distance between the points PQ = $\sqrt{(x_2 - x_1)^2 + (y_2 - y_1)^2}$

$10 = \sqrt{(10-2)^2 + [y-(-3)]^2}$

$10 = \sqrt{(8)^2 + [y+3]^2}$

squaring on both sides

$10^2 = \left(\sqrt{64 + (y+3)^2}\right)^2$

$100 = 64 + (y+3)^2$

$100 - 64 = (y+3)^2$

$(y+3)^2 = 36 \Rightarrow (y+3) = \pm\sqrt{36}$

$y + 3 = \pm 6$

$y = 6 - 3 = 3$ **OR** $y = -6 -3 = -9$

$y = 3$ OR $y = -9$

Consider only positive value ∴ **$y = 3$**

Problems on Section formula : P(x, y) = $\left(\frac{m_1x_2 + m_2x_1}{m_1+m_2}, \frac{m_1y_2+ m_2y_1}{m_1+m_2}\right)$

Example-1: Find the ratio in which the points P(2, x) divides the line joining the points A(-2, 2) and B(3,7) internally. Also find the value of x. [kseeb sample paper - 1]

Ans : Let, the point P(2, x) divides the line segment joining the points A(-2,2) B(3,7) internally

in the ratio $m_1 : m_2$ = k:1

P(2, x) =(x, y)

A(-2, 2) = (x_1, y_1)

B(3,7) = (x_2, y_2)

m_1	m_2	x_1	y_1	x_2	y_2
k	1	-2	2	3	7

By Section formula P (x, y) = $\left(\frac{m_1x_2 + m_2x_1}{m_1+m_2}, \frac{m_1y_2+ m_2y_1}{m_1+m_2}\right)$

$$(2, x) = \left(\frac{k(3)+ 1(-2)}{k+1}, \frac{k(7)+ 1(2)}{k+1}\right)$$

$$(2, x) = \left(\frac{3k-2}{k+1}, \frac{7k+ 2}{k+1}\right)$$

On comparing both sides

$2 = \frac{3k-2}{k+1}$

2(k+1) = 3k-2

2k+2 = 3k-2

2+2 = 3k-2k

k = 4

$x= \frac{7k+ 2}{k+1}$

put **k = 4**

$x= \frac{7(4)+ 2}{(4)+1}= \frac{28+ 2}{5} =\frac{30}{5}= 6$

∴ The value of x=6

It means point(2,x) divides the segment AB internally in 4:1

---

2. Find the ratio in which the line segment joining the points (-3,10) and (6,-8) is divided by (-1,6)

Ans : Let P(-1, 6) =(x, y), A(-3, 10)= (x_1, y_1), B(6, -8)= (x_2, y_2), m_1=?, m_2 =?

x_1	y_1	x_2	y_2
-3	10	6	-8

By Section formula P (x, y) = $\left(\frac{m_1x_2 + m_2x_1}{m_1+m_2}, \frac{m_1y_2+ m_2y_1}{m_1+m_2}\right)$

$$(-1, 6) = \left(\frac{m_1(6)+ m_2(-3)}{m_1+m_2}, \frac{m_1(-8)+ m_2(10)}{m_1+m_2}\right)$$

$$(-1, 6) = \left(\frac{6m_1-3m_2}{m_1+m_2}, \frac{-8m_1+ 10m_2}{m_1+m_2}\right)$$

On comparing both sides

$-1 = \frac{6m_1 - 3\,m_2}{m_1 + m_2}$ OR $6 = \frac{-8m_1 + 10m_2}{m_1 + m_2}$

$-1(m_1 + m_2) = 6m_1 - 3\,m_2$

$-m_1 - m_2 = 6m_1 - 3\,m_2$

$-m_1 - 6m_1 = -3\,m_2 + m_2$

$-7m_1 = -2m_2$

$\frac{m_1}{m_2} = \frac{-2}{-7} = \frac{2}{7}$

$\mathbf{m_1 : m_2 = 2:7}$

So, the point (-1, 6) divides the line segment the points A(-3,10) and B(6, -8)in the ratio 2:7

---

3. Find the ratio in which the line segment joining A(1,-5) and B(-4,5) is divided by the x-axis. Also find the coordinates of the point of division.

Ans : The coordinates of a point on the x-axis are (x, 0), Let Ratio be k:1

P(x,y) = (x,o), A(1,-5) = (x_1, y_1), B(-4,5) =(x_2, y_2), $m_1 : m_2 = k:1$

By Section formula P (x, y) $= \left(\frac{m_1x_2 + m_2\,x_1}{m_1 + m_2}, \frac{m_1y_2 + m_2\,y_1}{m_1 + m_2}\right)$

$(x, 0) = \left(\frac{k(-4) + 1(1)}{k+1}, \frac{k(5) + 1(-5)}{k+1}\right)$

$(x, 0) = \left(\frac{-4k + 1}{k+1}, \frac{5k-5}{k+1}\right)$

On comparing both sides

$x = \frac{-4k + 1}{k+1}$ OR $0 = \frac{5k-5}{k+1}$

$0(k+1) = 5k-5$

$0 = 5k-5$

$5k = 5$

$k = \frac{5}{5} = 1$ $\therefore$ **k = 1**

The ratios are $m_1 : m_2 = 1 : 1$

$x = \frac{-4k + 1}{k+1} = \frac{-4(1) + 1}{1+1} = \frac{-4 + 1}{2} = \frac{-3}{2}$ $\therefore$ **x =** $\mathbf{\frac{-3}{2}}$

The coordinates of the point of division = ($\frac{-3}{2}$, 0)

4.Find the coordinates of the points of trisection of the line segment joining (4,-1) and (-2,-3)

Ans : Let P and Q are the trisection points of AB

$\Longrightarrow$ AP = PQ = QB

$\therefore$ The point P divides AB internally in the ratio 1:2

$A(x_1, y_1) = (4, -1)$, $B(x_2, y_2) = (-2, -3)$

$m_1 = 1$, $m_2 = 2$

x_1	y_1	x_2	y_2
4	-1	-2	-3

By Section formula $P(x, y) = \left(\frac{m_1x_2 + m_2x_1}{m_1+m_2}, \frac{m_1y_2 + m_2y_1}{m_1+m_2}\right)$

$$= \left(\frac{1(-2)+2(4)}{1+2}, \frac{1(-3)+2(-1)}{1+2}\right)$$

$$= \left(\frac{-2+8}{3}, \frac{-3-2}{3}\right) = \left(\frac{6}{3}, \frac{-5}{3}\right) = \left(2, \frac{-5}{3}\right)$$

$$P(x, y) = \left(2, \frac{-5}{3}\right)$$

$\therefore$ The point Q divides AB internally in the ratio 2:1

$A(x_1, y_1) = (4, -1)$, $B(x_2, y_2) = (-2, -3)$

$m_1 = 2$, $m_2 = 1$

x_1	y_1	x_2	y_2
4	-1	-2	-3

By Section formula $P(x, y) = \left(\frac{m_1x_2 + m_2x_1}{m_1+m_2}, \frac{m_1y_2 + m_2y_1}{m_1+m_2}\right)$

$$= \left(\frac{2(-2)+1(4)}{2+1}, \frac{2(-3)+1(-1)}{2+1}\right)$$

$$= \left(\frac{-4+4}{3}, \frac{-6-1}{1+2}\right) = \left(\frac{0}{3}, \frac{-7}{3}\right) = \left(0, \frac{-7}{3}\right)$$

$$\therefore \quad P(x, y) = \left(0, \frac{-7}{3}\right)$$

Practice problem :

1) Find the coordinates of the points of trisection (ie., points dividing in three equal parts) of the line segment joining the points A(2, -2) and B(-7, 4)

---

5. If A and B are (-2, -2) and (2, -4), respectively, find the coordinates of P such that AP= $\frac{3}{7}$ AB and P lies on the line segment AB.

Ans : AB= 7 $\therefore$ AP= $\frac{3}{7}$ AB

P divides AB in the ratio 3:4 $\Longrightarrow$ AP : BP= 3:4 $\Longrightarrow m_1 = 3$ $m_2 = 4$

$A(x_1, y_1)=(-2, -2)$,

$B(x_2, y_2)=(2, -4)$

x_1	y_1	x_2	y_2
-2	-2	2	-4

By Section formula $P(x, y) = \left(\frac{m_1x_2 + m_2x_1}{m_1+m_2}, \frac{m_1y_2 + m_2y_1}{m_1+m_2}\right)$

$$P(x, y) = \left(\frac{3(2)+4(-2)}{3+4}, \frac{3(-4)+4(-2)}{3+4}\right)$$

$$= \left(\frac{6-8}{7}, \frac{-12-8}{7}\right) = \left(\frac{-2}{7}, \frac{-20}{7}\right)$$

$\therefore$ The coordinates of P are $\left(\frac{-2}{7}, \frac{-20}{7}\right)$

6. Find the coordinates of the point which divides the line segment joining the points (4, -3) and (8, 5) in the ratio 3 : 1 internally **[April-2019]**

Ans : Let P(x, y) be the required point.

$A(x_1, y_1)=(4, -3)$, $B(x_2, y_2)=(8, 5)$

$m_1 = 3$, $m_2 = 1$

By Section formula $P(x, y) = \left(\frac{m_1x_2 + m_2x_1}{m_1+m_2}, \frac{m_1y_2 + m_2y_1}{m_1+m_2}\right)$

$$= \left(\frac{3(8)+1(4)}{3+1}, \frac{3(5)+1(-3)}{3+1}\right)$$

$$= \left(\frac{24+4}{4}, \frac{15-3}{4}\right) = \left(\frac{28}{4}, \frac{12}{4}\right) = (7, 3)$$

$\therefore$ $P(x, y) = (7, 3)$

7. The coordinates of the vertices of triangle ABC are A(-3, 2), B(-1, -4) and C(5, 2) . If M and N are the mid points of AB and ACespectively, prove that 2MN=BC. **[April-2019 : 3 Marks]**

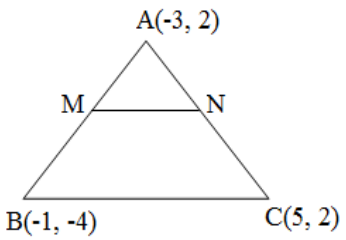

Co-ordinates of M = $\left(\frac{x_1+x_2}{2}, \frac{y_1+y_2}{2}\right)$

$A(x_1, y_1)= (-3, 2)$ $= \left(\frac{-3+(-1)}{2}, \frac{2+(-4)}{2}\right)$

$B(x_2, y_2)= (-1, -4)$ $= \left(\frac{-3-1}{2}, \frac{2-4}{2}\right)$

$= \left(\frac{-4}{2}, \frac{-2}{2}\right)$

Co-ordinates of M = **(-2, -1)**

Co-ordinates of N = $\left(\frac{x_1+x_2}{2}, \frac{y_1+y_2}{2}\right)$

$A(x_1, y_1) = (-3, 2)$ $= \left(\frac{-3+5}{2}, \frac{2+2}{2}\right)$

$C(x_2, y_2) = (5, 2)$ $= \left(\frac{2}{2}, \frac{4}{2}\right)$

Co-ordinates of N = **(1, 2)**

Length of MN $= \sqrt{(x_2 - x_1)^2 + (y_2 - y_1)^2}$

$M(x_1, y_1) = (-2, -1))$ $= \sqrt{(1-(-2))^2 + (2-(-1))^2}$

$N(x_2, y_2) = (1, 2)$ $= \sqrt{(1+2)^2 + (2+1)^2}$

$= \sqrt{(3)^2 + (3)^2} = \sqrt{9+9} = \sqrt{18} = \sqrt{9X2} = 3\sqrt{2}$

MN $= 3\sqrt{2}$

Length of BC $= \sqrt{(x_2 - x_1)^2 + (y_2 - y_1)^2}$

$B(x_1, y_1) = (-1, -4))$ $= \sqrt{(5-(-1))^2 + (2-(-4))^2}$

$C(x_2, y_2) = (5, 2)$ $= \sqrt{(5+1)^2 + (2+4)^2}$

$= \sqrt{(6)^2 + (6)^2} = \sqrt{36+36} = \sqrt{72} = \sqrt{36X2} = 6\sqrt{2}$

BC $= 6\sqrt{2}$

2**MN** $= 2 \times 3\sqrt{2} = 6\sqrt{2}$

$\therefore$ 2**MN = BC**

PROBLEMS ON AREA OF TRIANGLE :- **3-MARKS**

Area of the Triangle ABC $= \frac{1}{2}[x_1(y_2 - y_3) + x_2(y_3 - y_1) + x_3(y_1 - y_2)]$ **Sq.units**

1) Find the area of the triangle whose vertices are (1, -1), (-4, 6) and (-3, -5) **[June -2019]**

Ans : $A(x_1, y_1) = (1, -1)$

$B(x_2, y_2) = (-4, 6)$

$C(x_3, y_3) = (-3, -5)$

x_1	y_1	x_2	y_2	x_3	y_3
1	-1	-4	6	-3	-5

Area of the Triangle ABC $= \frac{1}{2}[x_1(y_2 - y_3) + x_2(y_3 - y_1) + x_3(y_1 - y_2)]$ Sq.units

$= \frac{1}{2}[1(6-(-5)) + (-4)(-5-(-1)) + (-3)(-1-6)]$

$= \frac{1}{2}[1(6+5)) + (-4)(-5+1)) + (-3)(-7)]$

$= \frac{1}{2}[1(11)) + (-4)(-4)) + 21]$

$= \frac{1}{2}[11 + 16 + 21] == \frac{1}{2}[48]$ =24 Sq. units.

So, the area of the triangle is 24 Square units.

Practice problems :

1).Find the area of the triangle whose vertices are (2, 3), (-1, 0) and (2, -4)

2).Find the area of the triangle whose vertices are (-5, -1), (3, -5) and (5, 2)

3).Find the area of the triangle formed by the points A(5, 2), B(4, 7) and C (7, -4)

4).Find the area of the triangle formed by the points P(-1.5, 3), Q(6,-2) and R (-3, 4)

---

2). Find the value of 'k' if the points A(2,3), B(4,k) and C(6,-3) are collinear.

Since the given points are collinear, the area of the triangle formed by them must be =0

$A(x_1, y_1)$= (2, 3)

$B(x_2, y_2)$= (4, k)

$C(x_3, y_3)$= (6, -3)

x_1	y_1	x_2	y_2	x_3	y_3
2	3	4	k	6	-3

Area of the Triangle ABC = $\frac{1}{2}[x_1(y_2 - y_3) + x_2(y_3 - y_1) + x_3(y_1 - y_2)] = 0$

$$\frac{1}{2}[2(k-(-3)) + 4(-3-3) + 6(3-k)] = 0$$

$$\frac{1}{2}[2(k+3)) + 4(-6) + 6(3-k)] = 0$$

$$\frac{1}{2}[2k + 6 - 24 + 18 - 6k] = 0$$

$$\frac{1}{2}[-4k + 24 - 24] = 0$$

$$\frac{1}{2}[-4k] = 0$$

$$-2k = 0$$

$k = \frac{0}{-2} = 0$ $\therefore$ **k = 0**

Practice problems :

1). **Find the value of 'k' if the points A(7, -2), B(5, 1) and C(3, k) are collinear.**

2). **Find the value of 'k' if the points A(8, 1), B(k, -4) and C(2, -5) are collinear.**

Example-1: Find the area of the triangle formed by joining the mid-points of the sides of the triangle whose vertices are A(2, 2), B(4, 4) and C(2, 6) [kseeb sample paper - 1]

Let, A(2, 3), B(4. 4) and C(2, 6)be the vertices of the triangle ABC.

D, E and F are the midpoint of AB, BC and CA

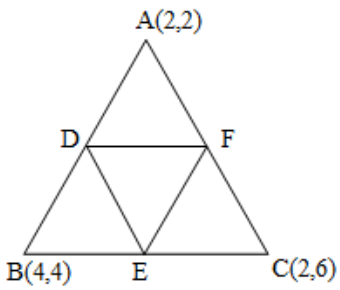

D is the midpoint of AB, The coordinates of D are

$A(x_1, y_1)$= (2, 2)

$B(x_2, y_2)$= (4, 4)

x_1	y_1	x_2	y_2
2	2	4	4

$$D(x,y) = \left(\frac{x_1 + x_2}{2}, \frac{y_1 + y_2}{2}\right)$$

$$= \left(\frac{2+4}{2}, \frac{2+4}{2}\right) = \left(\frac{6}{2}, \frac{6}{2}\right)$$

D(x,y) = (3, 3)

E is the midpoint of BC, The coordinates of E are ,

$B(x_1, y_1) = (4, 4)$

$C(x_2, y_2) = (2, 6)$

x_1	y_1	x_2	y_2
4	4	2	6

$$E(x,y) = \left(\frac{x_1 + x_2}{2}, \frac{y_1 + y_2}{2}\right)$$

$$= \left(\frac{4+2}{2}, \frac{4+6}{2}\right) = \left(\frac{6}{2}, \frac{10}{2}\right)$$

E (x,y) = (3, 5)

F is the midpoint of AC, The coordinates of F are,

$A(x_1, y_1) = (2, 2)$

$C(x_2, y_2) = (2, 6)$

x_1	y_1	x_2	y_2
2	2	2	6

$$F(x,y) = \left(\frac{x_1 + x_2}{2}, \frac{y_1 + y_2}{2}\right)$$

$$= \left(\frac{2+2}{2}, \frac{2+6}{2}\right) = \left(\frac{4}{2}, \frac{8}{2}\right)$$

F (x,y) = (2, 4)

D (x_1, y_1)= **(3, 3)**

E (x_2, y_2)= **(3, 5)**

F (x_3, y_3)= **(2, 4)**

x_1	y_1	x_2	y_2	x_3	y_3
3	3	3	5	2	4

Area of the Triangle DEF $= \frac{1}{2}[x_1(y_2 - y_3) + x_2(y_3 - y_1) + x_3(y_1 - y_2)]$

$= \frac{1}{2}[3(5-4) + 3(4-3) + 2(3-5)]$

$= \frac{1}{2}[3(1)) + 3(1) + 2(-2)]$

$= \frac{1}{2}[3 + 3 - 4] = \frac{1}{2}[6 - 4] = \frac{1}{2}[2]$

= 1sq.Units

∴ Area of the Triangle DEF = 1sq.Units

Practice problems :

1).Find the area of the triangle formed by joining the mid-points of the sides of the triangle whose vertices are (0,-1), (2,1) and (0,3).

2). Find the area of the quadrilateral whose vertices, taken in order are (-4,-2), (-3,-5), (3,-2) and (2,3)

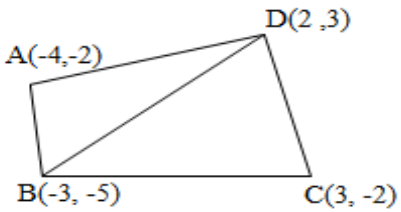

[Hints : Area of the quadrilateral ABCD = Area of the Triangle ABD + Area of the Triangle BDC]

3. The vertices of a Δ ABC are A (– 5, – 1), B (3, – 5), C (5, 2). Show that the area of the Δ ABC is four times the area of the triangle formed by joining the mid-points of the sides of the triangle ABC. **[April-2019 : 3 Marks]**

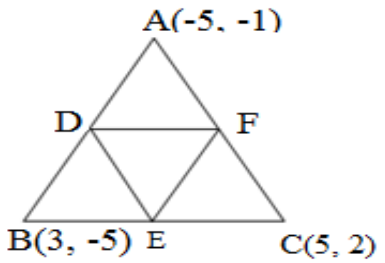

Ans :

$A(x_1, y_1) = (-5, -1)$

$B(x_2, y_2) = (3, -5)$

$C(x_3, y_3) = (5, 2)$

Area of the Triangle ABC $= \frac{1}{2}[x_1(y_2 - y_3) + x_2(y_3 - y_1) + x_3(y_1 - y_2)]$

$= \frac{1}{2}[-5(-5-2) + 3(2-(-1)) + 5(-1-(-5))]$

$= \frac{1}{2}[-5(-7)) + 3(2+1) + 5(-1+5)]$

$= \frac{1}{2}[35 + 9 + 20] = \frac{1}{2}[64] =$ 32 sq.units

∴ **Area of the Triangle ABC = 32 sq.units**

Co-ordinates of D = $\left(\frac{x_1 + x_2}{2}, \frac{y_1 + y_2}{2}\right)$

$A(x_1, y_1)=(-5, -1)$ $= \left(\frac{-5+3}{2}, \frac{-1+(-5)}{2}\right) = \left(\frac{-2}{2}, \frac{-1-5}{2}\right) = \left(\frac{-2}{2}, \frac{-1-5}{2}\right) = \left(\frac{-2}{2}, \frac{-6}{2}\right)$

$B(x_2, y_2)= (3, -5)$ **Co-ordinates of D = (-1, -3)**

Co-ordinates of E = $\left(\frac{x_1 + x_2}{2}, \frac{y_1 + y_2}{2}\right)$

$B(x_1, y_1)= (3, -5)$ $= \left(\frac{3+5}{2}, \frac{-5+2)}{2}\right) = \left(\frac{8}{2}, \frac{-3}{2}\right) = \left(4, \frac{-3}{2}\right)$

$C(x_2, y_2)= (5, 2)$ **Co-ordinates of E** $= \left(4, \frac{-3}{2}\right)$

Co-ordinates of F = $\left(\frac{x_1 + x_2}{2}, \frac{y_1 + y_2}{2}\right)$

$A(x_1, y_1)= (-5, -1)$ $= \left(\frac{-5+5}{2}, \frac{-1+2)}{2}\right) = \left(\frac{0}{2}, \frac{1}{2}\right) = \left(0, \frac{1}{2}\right)$

$C(x_2, y_2)= (5, 2)$ **Co-ordinates of F** $= \left(0, \frac{1}{2}\right)$

Area of the Triangle DEF = $\frac{1}{2}[x_1(y_2 - y_3) + x_2(y_3 - y_1) + x_3(y_1 - y_2)]$

$D = (-1, -3)= (x_1, y_1)$ $= \frac{1}{2}\left[-1\left(\frac{-3}{2} - \frac{1}{2}\right) + 4\left(\frac{1}{2} - (-3)\right) + 0\left(-3 - (\frac{-3}{2})\right)\right]$

$E = \left(4, \frac{-3}{2}\right) = (x_2, y_2)$ $= \frac{1}{2}\left[-1\left(\frac{-3-1}{2}\right) + 4\left(\frac{1}{2} + 3)\right) + 0\left(-3 + \frac{3}{2}\right)\right]$

$F = \left(0, \frac{1}{2}\right) = (x_3, y_3)$ $= \frac{1}{2}\left[-1\left(\frac{-4}{2}\right) + 4(\frac{7}{2}) + 0\right] = \frac{1}{2}\left[\left(\frac{4}{2}\right) + 14 + 0\right]$

$= \frac{1}{2}[2 + 14] = \frac{16}{2} = 8$

Area of the Triangle DEF =8 sq.units

Area of the Triangle ABC = 4 × Area of the Triangle DEF

32 = 4×8

32 = 32

UNIT- 4 : QUADRATIC EQUATIONS :

[1 + 2 + 3 =6 Marks]

* Quadratic formula $x = \frac{-b \pm \sqrt{b^2 - 4ac}}{2a}$

* Aquadratic equation $ax^2+bx+c = 0$ has

i) two distinct real roots, if $b^2 - 4ac > 0$

ii) two equal roots (i.e. coincident roots), if $b^2 - 4ac = 0$

iii) no real roots, if $b^2 - 4ac < 0$

1. Find the roots of the quadratic equation $2x^2 - 5x + 3=0$ by suitable method. OR

Solve the equation $2x^2 -5x + 3=0$ by using formula **[March/April :2019: 2-Marks]**

1. Factorisation method	2. Formula method
Solution : $2x^2 - 5x + 3 =0$ $2x^2 \times -3 = -6x^2$ $-3x \quad -2x$ $2x^2 - 5x + 3 = 2x^2 - 3x - 2x + 3$ $= x(2x - 3) - 1(2x - 3)$ $=(2x - 3)(x - 1)$ $(2x - 3)(x - 1)= 0$ $(2x - 3)= 0$ and $(x - 1)= 0$ $2x = 3$ $\quad x = 1$ $\therefore$ **$x = \frac{3}{2}$ and $x = 1$**	Solution :$2x^2 - 5x + 3 =0$ $a =2,\ b=-5,\ c = 3$ Quadratic formula : $x = \frac{-b \pm \sqrt{b^2 - 4ac}}{2a}$ $= \frac{-(-5) \pm \sqrt{(-5)^2 - 4(2)(3)}}{2(2)}$ $= \frac{+5 \pm \sqrt{25 - 24)}}{4}$ $x = \frac{+5 \pm \sqrt{1}}{4} = \frac{+5 \pm 1}{4}$ $x = \frac{+5+1}{4}$ and $x = \frac{+5-1}{4}$ $x = \frac{6}{4} = \frac{3}{2}$ $\quad x = \frac{4}{4} = 1$ $\therefore$ **$x = \frac{3}{2}$ and $x = 1$**

Practice problems :

1) Solve the equation $x^2 -3x - 3=0$ by using formula **[June :2019]**

2) Find the roots of the equation $6x^2 +7x - 10=0$. **[Kseeb model paper-1:2019]**

2) Find the roots of the quadratic equation $x^2 +7x +12=0$. **[Kseeb model paper-1:2019]**

4) Find the roots of the following quadratic equations, by applying the quadratic formula.

i) $3x^2 - 6x + 2 = 0$ ii) $x^2 - 3x + 1 = 0$ iii) $3x^2 - 5x + 2 = 0$

iv) $x^2 + 4x + 5 = 0$ v) $2x^2 - 2\sqrt{2}x+1=0$ vi) $4x^2 + 4\sqrt{3}x+3=0$

vii) $2x^2 + x - 4 = 0$ viii) $2x^2 - 7x + 3 = 0$ ix) $x - \frac{1}{x} = 3$

3-Marks questions :

1) Find two consecutive odd positive integers, sum of whose squares is 290.

Ans : Let smaller of the two consicutive odd positive integer be 'x'

Then the second integer will be (x+2)

According to the question,

Sum of whose squares is 290

$x^2 + (x+2)^2 = 290$

$x^2 + x^2 + 4x + 4 = 290$

$2x^2 + 4x + 4 - 290 = 0$

$2x^2 + 4x - 286 = 0$ (dividing through out by 2)

$x^2 + 2x - 143 = 0$

a = 1, b=2, c=-143

Using the quadratic formula, we get

$$x = \frac{-b \pm \sqrt{b^2 - 4ac}}{2a}$$

$$= \frac{-(2) \pm \sqrt{(2)^2 - 4(1)(-143)}}{2(1)}$$

$$= \frac{-2 \pm \sqrt{4 + 572)}}{2}$$

$$x = \frac{-2 \pm \sqrt{576}}{2} = \frac{-2 \pm 24}{2}$$

$x = \frac{-2+24}{2}$ and $x = \frac{-2-24}{2}$

$x = \frac{22}{2} = 11$ $\quad$ $x = \frac{-26}{2} = -13$

$\therefore$ **x = 11** and **x = −13**

But x is given to be an odd positive integer, $x \neq -13$, x = 11

Thus, the two consecutive odd integers are 11 and 13.

2) **In a class test, the sum of shefali's marks in Mathematics and English is 30. Had she got 2 marks more in Mathematics and 3 marks less than in English, the product of their marks would have been 210. Find her marks in the two subjects.**

Ans : Let Shefali's markn in Maths is 'x'

Marks in English is (30 –x)

According to question,

$(x+2)(30 - x - 3) = 210$

$(x + 2)(27 - x) = 210$

$27x - x^2 + 54 - 2x = 210$

$25x - x^2 + 54 - 210 = 0$

$25x - x^2 - 156 = 0$

$-x^2 + 25x - 156 = 0$ (Multiplying by '-1')

$x^2 - 25x + 156 = 0$

$x^2 \times 156 = 156\, x^2$

-12x -13x

$x^2 - 25x + 156 = x^2 - 12x - 13x + 156$

$= x(x - 12) - 13(x - 12)$

$= (x - 12)(x - 13)$

$(x - 12)(x - 13) = 0$

$(x - 12) = 0$ and $(x - 13) = 0$

x = 12 and **x =13**

If the marks in Mathematics x=12, Then in English is(30 – x) = (30 – 12) =18

If the marks in Mathematics x=13, Then in English is(30 – x) = (30 – 13) =17

Practice questions :

1)The diagonal of a rectangular field is 60meters more than shorter side. If the longer side is 30metres more than the shorter side, find the sides of the field.

Hints : Length of the Shorter side of the rectangular field = x m,
Length of the longer side of the rectangular field = (x + 30) m
Diagonal of the rectangular field = (x + 60)m , and use pythagorus theorem

2)The difference of squares of two numbers is 180. The square of the smaller number is 8 times the larger number. Find the two numbers.

Hints : Let bigger number be 'x' and smaller number be 'y'
According to problem, $x^2 - y^2 = 180$ and $y^2 = 8x$

3)The sum of the reciprocals of Rehman's ages, (in years) 3years ago and 5 years from now Is $\frac{1}{3}$. Find his present age.

Hints : Rehman's present age = x, 3years ago Rehman's age = (x – 3),
5 yers from now Rehman's age =(x +3)
According to problem, Sum of reciprocals of Rehman's age $=\frac{1}{3}$
$\frac{1}{x-3} + \frac{1}{x+5} = \frac{1}{3}$

4) A train trevels 360km at a uniform speed. If the speed had been 5km/h more, it would have taken 1 hour less for the same journey. Find the speed of the train.

Hints : Speed of the train = x km/h, The time taken to travel 360 km = $\frac{360}{x}$ h
If speed is 5km/h more, Then the required time is = $\frac{360}{x+5}$ h
Difference in time = 1 hours $\Longrightarrow \frac{360}{x} - \frac{360}{x+5} = 1$

5) Sum of the areas of two squares is 468 m^2. If the differenc of their perimeters is 24m, find the sides of the two squares.

Hints : Let length of the side of first square = x ∴ The perimeter of first square = 4x
length of the side of second square = y ∴ The perimeter of second square = 4y
According to the question, $x^2 + y^2 = 468$ ----(1) and $x - y = 24$ --------(2)
Put x =24 + y in (1)

6) Sum of the areas of two squares is 640 m^2. If the differenc of their perimeters is 64m, find the sides of the two squares **[Kseeb Model paper -1 : 2019]**

7) The length of a rectangular field is 3 times its breadth. If the area of the field is 147 sq.m find itslength and breadth. **[March/April :2019]**

Problems on Nature of the roots :

A quadratic equation $ax^2+bx+c = 0$ has

i) two distinct real roots, if $b^2 - 4ac > 0$

ii) two equal roots (i.e. coincident roots), if $b^2 - 4ac = 0$

iii) no real roots, if $b^2 - 4ac < 0$

[$b^2 - 4ac$ is called the discrimant of quadratic equation.]

1) Find the discrimant of the equation $3x^2 - 2x + \frac{1}{3} = 0$ and hence find the nature of its roots. Find them, If they are real.

Ans : Solution : $3x^2 - 2x + \frac{1}{3} = 0$

a = 3, b = -2, c = $\frac{1}{3}$

∴ Discriminant $b^2 - 4ac = (-2)^2 - 4(3)(\frac{1}{3})$

$= 4 - 4 = 0$

Hence, The given quadratic equation has two equal real roots.

$$x = \frac{-b \pm \sqrt{b^2 - 4ac}}{2a}$$

$$= \frac{-b \pm \sqrt{0}}{2a} = \frac{-b}{2a} = \frac{-(-2)}{2(3)} = \frac{2}{6} = \frac{1}{3}$$

The roots are $\frac{1}{3}, \frac{1}{3}$

2) Find the discrimant of the equation

$2x^2 - 4x + 3 = 0$ **[March/April :2019]**

Solution : $2x^2 - 4x + 3 = 0$

a = 2, b = -4 c = 3

∴ Discriminant $b^2 - 4ac = (-4)^2 - 4(2)(3)$

$= 16 - 24 = -8$

Practice problems : -

I. Find the nature of the roots of following quadratic equations . If they are real roots exist find them.

i) $2x^2 - 3x + 5 = 0$ **ii) $2x^2 - 6x + 3 = 0$** **iii) $3x^2 - 4\sqrt{3}x + 4 = 0$**

3) Find the value of k for each of the following quadratic equations, so that they have two equal roots

i) $2x^2 + kx + 3 = 0$

Ans : Given quadratic eqn have two equal roots

∴ Discriminant $b^2 - 4ac = 0$

a = 2 , b=k, c=3

$k^2 - 4(2)(3) = 0$

$k^2 - 24 = 0$

$k^2 = 24$

$k = \pm\sqrt{24} = \pm\sqrt{4 \times 2}$

∴ **$k = \pm 2\sqrt{2}$**

ii) $kx(x - 2) + 6 = 0$

Soln : $kx(x - 2) + 6 = 0$

$kx^2 - 2kx + 6 = 0$

Given quadratic eqn have two equal roots

∴ Discriminant $b^2 - 4ac = 0$

a =k , b= -2k, c=6

$(-2k)^2 - 4(k)(6) = 0$

$4k^2 - 24k \Rightarrow 4k(k - 6) = 0$

$k - 6 = \frac{0}{4k} = 0$

$k - 6 = 0$ ∴ **k = 6**

UNIT- 5. INTRODUCTION TO TRIGONOMETRY : [1+2+3/4=6/7 Marks]

TRIGONOMETRIC RATIOS :

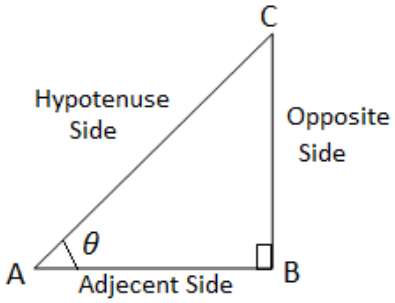

Sine of ∠A = $\frac{\text{Opposite side}}{\text{hypotenuse side}} = \frac{BC}{AC}$

coines of ∠A = $\frac{\text{adjacent side}}{\text{hypotenuse side}} = \frac{AB}{AC}$

tangent of ∠A = $\frac{\text{opposite side}}{\text{adjecent side}} = \frac{BC}{AB}$

cosecant of ∠A = $\frac{1}{\text{Sine of} \angle A} = \frac{\text{hypotenuse side}}{\text{Opposite side}} = \frac{AC}{Bc}$

secant of ∠A = $\frac{1}{\text{cosine of} \angle A} = \frac{\text{hypotenuse side}}{\text{adjecent side}} = \frac{AC}{AB}$

cotangent of ∠A = $\frac{1}{\text{tangent of} \angle A} = \frac{\text{adjecent side}}{\text{opposite side}} = \frac{AB}{BC}$

Example problems :

1) If sin θ = $\frac{12}{13}$, find cos θ and tan θ

[March/April :2019 -2 Marks]

Sin θ = $\frac{\text{Opposite side}}{\text{hypotenuse side}} = \frac{BC}{AC} = \frac{12}{13}$

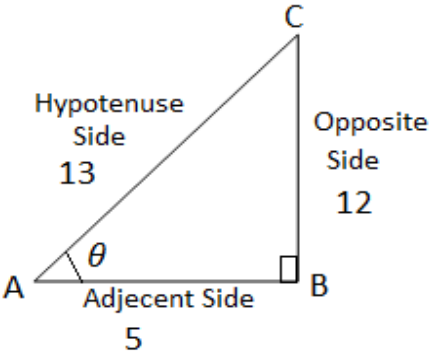

In right angle triangle ABC ,

$AC^2 = AB^2 + BC^2$

$132 = AB^2 + 12^2$

$169 = AB^2 + 144$

$AB^2 = 169 - 144 = 25$

$AB = \sqrt{25} = 5$

cos θ = $\frac{\text{adjacent side}}{\text{hypotenuse side}} = \frac{5}{13}$

tan θ = $\frac{\text{opposite side}}{\text{adjecent side}} = \frac{12}{5}$

Practice problems :

1) If cosec θ = $\frac{13}{12}$, then find the value of cos θ **[June -2019]**

2) If Sin A = $\frac{3}{4}$, calculate cosA and tanA.

3) Given 15cotA=8, find sinA and secA.

4) Given sec θ = $\frac{13}{12}$ calculate all other trigonometric ratios.

5) If cot θ = $\frac{7}{8}$, evaluate $\frac{(1+\sin\theta)(1-\sin\theta)}{(1+\cos\theta)(1-\cos\theta)}$.

6) In triangle PQR, right angled at Q, PR+QR=25cm and PQ=5cm, Determine the values of sinP, cosP and tanP.

2 If sin θ = $\frac{3}{5}$ and cos θ= $\frac{4}{5}$. find the value of $\sin^2\theta + \cos^2\theta$ **[Kseeb Model paper-1:2019]**

Ans : $\sin^2\theta + \cos^2\theta = \left(\frac{3}{5}\right)^2 + \left(\frac{4}{5}\right)^2$

$= \frac{9}{25} + \frac{16}{25}$

$= \frac{9+16}{25} = \frac{25}{25} = 1$

$\therefore \sin^2\theta + \cos^2\theta = 1$

TRIGONOMETRIC RATIOS OF SOME SPECIFIC ANGLES :

Angle A	0^0	30^0	45^0	60^0	90^0
sin A	0	$\frac{1}{2}$	$\frac{1}{\sqrt{2}}$	$\frac{\sqrt{3}}{2}$	1
cos A	1	$\frac{\sqrt{3}}{2}$	$\frac{1}{\sqrt{2}}$	$\frac{1}{2}$	0
tan A	0	$\frac{1}{\sqrt{3}}$	1	$\sqrt{3}$	Not defined
cosec A	Not defined	2	$\sqrt{2}$	$\frac{2}{\sqrt{3}}$	1
sec A	1	$\frac{2}{\sqrt{3}}$	$\sqrt{2}$	2	Not defined
cot A	Not defined	$\sqrt{3}$	1	$\frac{1}{\sqrt{3}}$	0

Example problems :

1) Evaluate : $\sin 60^0 \cos 30^0 + \sin 30^0 \cos 60^0$

Ans :

$\sin 60^0 = \frac{\sqrt{3}}{2}$, $\cos 30^0 = \frac{\sqrt{3}}{2}$, $\sin 30^0 = \frac{1}{2}$, $\cos 60^0 = \frac{1}{2}$

$\sin 60^0 \cos 30^0 + \sin 30^0 \cos 60^0 = \frac{\sqrt{3}}{2} \times \frac{\sqrt{3}}{2} + \frac{1}{2} \times \frac{1}{2}$

$= \frac{3}{4} + \frac{1}{4} = \frac{3+1}{4} = \frac{4}{4} = 1$

2) Evaluate : $2\tan^2 45^0 + \cos^2 30^0 - \sin^2 60^0$

Ans :

$\tan 45^0 = 1$, $\cos 30^0 = \frac{\sqrt{3}}{2}$, $\sin 60^0 = \frac{\sqrt{3}}{2}$

$2\tan^2 45^0 + \cos^2 30^0 - \sin^2 60^0 = 2\,(1)^2 + \left(\frac{\sqrt{3}}{2}\right)^2 - \left(\frac{\sqrt{3}}{2}\right)^2$

$= 2 + 0 = 2$

3) If $\sqrt{3}\tan\theta = 1$ and θ is acute, find the value of $\sin 3\theta + \cos 2\theta$.

Ans : **[March/April :2019]**

$\sqrt{3}\tan\theta = 1$

$\tan\theta = \frac{1}{\sqrt{3}}$

$\tan\theta = \tan 30^0$

$\theta = 30^0$

$\sin 3\theta = \sin 3 \times 30^0 = \sin 90^0 = 1$

$\cos 2\theta = \cos 2 \times 30^0 = \cos 60^0 = \frac{1}{2}$

$\sin 3\theta + \cos 2\theta = 1 + \frac{1}{2} = \frac{2+1}{2} = \frac{3}{2}$

Practice problems : **[3/4-Marks questions]**

1) Evaluate : $\frac{\cos 45^0}{\sec 30^0 + \operatorname{cosec} 30^0}$ [**Hints :** rationalising the denominator]

2) Evaluate : $\frac{\sin 30^0 + \tan 45^0 - \operatorname{cosec} 60^0}{\sec 30^0 + \cos 60^0 + \cot 45^0}$

3)Evaluate : $\frac{5\cos^2 60^0 + 4\sec^2 30^0 - \tan^2 45^2}{\sin^2 60^0 + \cos^2 30^0}$

TRIGONOMETRIC RATIOS OF COMPLEMENTARY ANGLES :

$\sin(90^0 - A) = \cos A$, **$\cos(90^0 - A) = \sin A$,**

$\tan(90^0 - A) = \cot A$, **$\cot(90^0 - A) = \tan A$,**

$\sec(90^0 - A) = \operatorname{cosec} A$ **$\operatorname{cosec}(90^0 - A) = \sec A$**

Example problems :

1) Evaluate : $\frac{\sin 18^0}{\cos 72^0}$

Ans :

We know that $\sin(90^0 - A) = \cos A$

$$\frac{\sin 18^0}{\cos 72^0} = \frac{\sin(90^0 - 18^0)}{\cos 72^0} = \frac{\cos 72^0}{\cos 72^0} = 1$$

Practice questions :

1) Evaluate : i) $\frac{\tan 26^0}{\cot 64^0}$, ii) $\frac{\tan 65^0}{\cot 25^0}$

2) Evaluate : i) $\cos 48^0 - \sin 42^0$

ii) $\operatorname{cosec} 31^0 - \sec 59^0$

3) show that :

i) $\tan 48^0 \tan 23^0 \tan 42^0 \tan 67^0 = 1$

ii) $\cos 38^0 \cos 52^0 - \sin 38^0 \sin 52^0 = 0$

TRIGONOMETRIC IDENTITIES :

Some important formulae :

1) Reciprocal of $\sin A = \frac{1}{\operatorname{cosec} A}$,

Reciprocal of $\operatorname{cosec} A = \frac{1}{\sin A}$

2) Reciprocal of $\cos A = \frac{1}{\sec A}$,

Reciprocal of $\sec A = \frac{1}{\cos A}$

3) Reciprocal of $\tan A = \frac{1}{\cot}$,

Reciprocal of $\cot A = \frac{1}{\tan A}$

4) $\frac{\sin A}{\cos A} = \tan A$,

5) $\frac{\cos A}{\sin A} = \cot A$

6) $\sin^2 A + \cos^2 A = 1 \Longrightarrow \cos^2 A = 1 - \sin^2 A$

$\sin^2 A = 1 - \cos^2 A$

7) $1 + \tan^2 A = \sec^2 A \Longrightarrow \tan^2 A = \sec^2 A - 1$

$\sec^2 A - \tan^2 A = 1$

8) $\cot^2 A + 1 = \operatorname{cosec}^2 A \Longrightarrow \cot^2 A = \operatorname{cosec}^2 A - 1$

$\operatorname{cosec}^2 A - \cot^2 A = 1$

9) $(a+b)^2 = a^2 + 2ab + b^2$

10) $(a-b)^2 = a^2 - 2ab + b^2$

11) $(a+b)(a-b) = a^2 - b^2$

12) $(x + a)(x + b) = x^2 + x(a + b) + ab$

13) $(a + b)^3 = a^3 + b^3 + 3ab(a+b)$

14) $(a - b)^3 = a^3 - b^3 - 3ab(a-b)$

15) $a^3 + b^3 = (a + b)^3 - 3ab(a+b) =$

$= (a + b)(a^2 + b^2 - ab)$

16) $a^3 - b^3 = (a - b)^3 + 3ab(a-b)$

$= (a - b)(a^2 + b^2 + ab)$

Example problems :

1. Evaluate : $\frac{\sin^2 63^0 + \sin^2 27^0}{\cos^2 17^0 + \cos^2 73^0}$

Soln : $\frac{\sin^2 63^0 + \sin^2 27^0}{\cos^2 17^0 + \cos^2 73^0} = \frac{\sin^2(90-27^0) + \sin^2 27^0}{\cos^2(90-73^0) + \cos^2 73^0}$

$= \frac{\cos^2 27^0 + \sin^2 27^0}{\sin^2 73^0 + \cos^2 73^0} = \frac{1}{1} = 1$

Practice problems :

1. Evaluate : $\sin 25^0 \cos 65^0 + \cos 25^0 \sin 65^0$

2.Find te value of : $\sin^2 41^0 + \sin^2 49^0$

2. Prove that $\sec^4\theta - \sec^2\theta = \tan^4\theta + \tan^2\theta$

[Kseeb model paper : 1 :2 -Marks]

LHS = $\sec^4\theta - \sec^2\theta$

$= \sec^2\theta(\sec^2\theta - 1)$

put $\sec^2\theta - 1 = \tan^2\theta$

$= \sec^2\theta(\tan^2\theta)$

$= 1 + \tan^2\theta\,(\tan^2\theta)$

$= \tan^2\theta + \tan^4\theta$ = RHS

3.Prove that : $\frac{1}{\sec\theta - \tan\theta} = \frac{1+\sin\theta}{\cos\theta}$

LHS $= \frac{1}{\sec\theta - \tan\theta}$

Rationalising the denominator

$= \frac{1}{\sec\theta - \tan\theta} \times \frac{\sec\theta + \tan\theta}{\sec\theta + \tan\theta}$

$= \frac{\sec\theta + \tan\theta}{\sec^2\theta - \tan^2\theta}$ [$\because$ (a+b)(a-b) = $a^2 - b^2$]

$= \frac{\sec\theta + \tan\theta}{1}$ [$\because$ $\sec^2\theta - \tan^2\theta = 1$]

$= \sec\theta + \tan\theta = \frac{1}{\cos\theta} + \frac{\sin\theta}{\cos\theta}$

$= \frac{1+\sin\theta}{\cos\theta}$ = RHS

4. Prove that : $\frac{\cos A}{1+\sin A} + \frac{1+\sin A}{\cos A} = 2\sec A$

LHS = $\frac{\cos A}{1+\sin A} + \frac{1+\sin A}{\cos A} = \frac{\cos^2 A + (1+\sin A)^2}{(1+\sin A)\cos A}$

$= \frac{\cos^2 A + 1 + \sin^2 A + 2\sin A}{(1+\sin A)\cos A} = \frac{1+1+2\sin A}{(1+\sin A)\cos A}$

$= \frac{2+2\sin A}{(1+\sin A)\cos A} = \frac{2\cancel{(1+\sin A)}}{\cancel{(1+\sin A)}\cos A}$

$= \frac{2}{\cos A} = 2\sec A$

= RHS

5. Prove that : $\frac{\sin A}{1+\cos A} + \frac{1+\cos A}{\sin A} = 2\operatorname{cosec} A$

[Kseebmodel paper :2 : 4-Marks]

LHS = $\frac{\sin A}{1+\cos A} + \frac{1+\cos A}{\sin A} = \frac{\sin^2 A + (1+\cos A)^2}{(1+\cos A)\sin A}$

$= \frac{\sin^2 A + 1 + \cos^2 A + 2\cos A}{(1+\cos A)\sin A} = \frac{1+1+2\cos A}{(1+\cos A)\sin A}$

$= \frac{2+2\cos A}{(1+\cos A)\sin A} = \frac{2\cancel{(1+\cos A)}}{\cancel{(1+\cos A)}\sin A}$

$= \frac{2}{\sin A} = 2\operatorname{cosec} A$

=RHS

6. $\left(\frac{1+\cos\theta}{1-\cos\theta}\right) = (\operatorname{cosec}\theta + \cot\theta)^2$

[March/April : 2019 : 2-Marks]

L.H.S = $\left(\frac{1+\cos\theta}{1-\cos\theta}\right)$

Rationslising the denominator

$= \frac{(1+\cos\theta)}{(1-\cos\theta)} \times \frac{(1+\cos\theta)}{(1+\cos\theta)}$

$= \frac{(1+\cos\theta)^2}{(1+\cos\theta)(1-\cos\theta)} = \frac{(1+\cos\theta)^2}{1^2 - \cos^2\theta} = \frac{(1+\cos\theta)^2}{\sin^2\theta}$

$= \left(\frac{1+\cos\theta}{\sin\theta}\right)^2 = \left(\frac{1}{\sin\theta} + \frac{\cos\theta}{\sin\theta}\right)^2$

$= (\operatorname{cosec}\theta + \cot\theta)^2$ = R.H.S

7. $(\operatorname{cosec}\theta - \cot\theta)^2 = \left(\frac{1-\cos\theta}{1+\cos\theta}\right)$

L.H.S = $(\operatorname{cosec}\theta - \cot\theta)^2$

$= \operatorname{cosec}^2\theta + \cot^2\theta - 2\operatorname{cosec}\theta\cot\theta$

$= \left(\frac{1}{\sin^2\theta} + \frac{\cos^2\theta}{\sin^2\theta} - \frac{2\cos\theta}{\sin^2\theta}\right)$

$= \left(\frac{1+\cos^2\theta - 2\cos\theta}{\sin^2\theta}\right) = \frac{(1-\cos\theta)^2}{(1-\cos^2\theta)}$

$= \frac{\cancel{(1-\cos\theta)}(1-\cos\theta)}{\cancel{(1-\cos\theta)}(1+\cos\theta)} = \left(\frac{1-\cos\theta}{1+\cos\theta}\right)$ = RHS

Practice problems :

1. $(\operatorname{cosec}\theta + \cot\theta)^2 = \left(\frac{\sec\theta+1}{\sec\theta-1}\right)$

2.Prove that : $\frac{\operatorname{cosec} A}{\operatorname{cosec} A - 1} + \frac{\operatorname{cosec} A}{\operatorname{cosec} A + 1} = 2\sec^2 A$

8. Prove that : $\frac{\tan\theta+\sin\theta}{\tan\theta-\sin\theta} = \frac{\sec\theta+1}{\sec\theta-1}$

LHS = $\frac{\tan\theta+\sin\theta}{\tan\theta-\sin\theta} = \frac{\frac{\sin\theta}{\cos\theta}+\sin\theta}{\frac{\sin\theta}{\cos\theta}-\sin\theta}$

$= \frac{\cancel{\sin\theta}\left(\frac{1}{\cos\theta}+1\right)}{\cancel{\sin\theta}\left(\frac{1}{\cos\theta}-1\right)} = \frac{\sec\theta+1}{\sec\theta-1}$ **= RHS**

9.Prove that : $\frac{\cos A}{1+\tan A} - \frac{\sin A}{1+\cot A} = \cos A - \sin A$

LHS = $\frac{\cos A}{1+\tan A} - \frac{\sin A}{1+\cot A} = \frac{\cos A}{1+\frac{\sin A}{\cos A}} - \frac{\sin A}{1+\frac{\cos A}{\sin A}}$

$= \frac{\cos A}{\frac{\cos A+\sin A}{\cos A}} - \frac{\sin A}{\frac{\sin A+\cos A}{\sin A}}$

$= \frac{\cos^2 A}{\cos A+\sin A} - \frac{\sin^2 A}{\sin A+\cos A}$

$= \frac{\cos^2 A-\sin^2 A}{\sin A+\cos A}$

$= \frac{\cancel{(\cos A+\sin A)}(\cos A-\sin A)}{\cancel{(\cos A+\sin A)}}$

$= \cos A - \sin A$ = RHS

10. Prove that : $\frac{\sin\theta-2\sin^3\theta}{2\cos^3\theta-\cos\theta} = t$

LHS = $\frac{\sin\theta-2\sin^3\theta}{2\cos^3\theta-\cos\theta} = \frac{\sin\theta(1-2\sin^2\theta)}{\cos\theta(2\cos^2\theta-1)}$

$= \frac{\sin\theta(\sin^2\theta+\cos^2\theta-2\sin^2\theta)}{\cos\theta[2\cos^2\theta-(\sin^2\theta+\cos^2\theta)]}$

$= \frac{\sin\theta\cancel{(\cos^2\theta-\sin^2\theta)}}{\cos\theta\cancel{[\cos^2\theta-\sin^2\theta]}} = \tan\theta$ = RHS

11. $\frac{1+\sec A}{\sec A} = \frac{\sin^2 A}{1-\cos A}$

LHS = $\frac{1+\sec A}{\sec A} = \frac{1+\frac{1}{\cos A}}{\frac{1}{\cos A}} = \frac{\frac{\cos A+1}{\cos A}}{\frac{1}{\cos A}} = \cos A+1$

RHS = $\frac{\sin^2 A}{1-\cos A} = \frac{(1-\cos^2 A)}{1-\cos A} = \frac{(1+\cos A)(1-\cos A)}{(1-\cos A)}$

$= \cos A+1$

LHS = RHS

12. $\sqrt{\frac{1+\sin A}{1-\sin A}} = \sec A + \tan A$

LHS= $\sqrt{\frac{1+\sin A}{1-\sin A}}$ Rationalising the denominator

$\sqrt{\frac{1+\sin A}{1-\sin A} \times \frac{1+\sin A}{1+\sin A}} = \sqrt{\frac{(1+\sin A)^2}{(1-\sin A)(1+\sin A)}}$

$\sqrt{\frac{(1+\sin A)^2}{(1^2-\sin^2 A)}} = \sqrt{\frac{(1+\sin A)^2}{\cos^2 A}} = \frac{1+\sin A}{\cos A}$

$= \frac{1}{\cos A} + \frac{\sin A}{\cos A} = \sec A + \tan A$

13 $\sqrt{\frac{1-\cos A}{1+\cos A}} = \operatorname{cosec} A + \cot A$

LHS= $\sqrt{\frac{1-\cos A}{1+\cos A}}$ Rationalising the denominator

$\sqrt{\frac{1-\cos A}{1+\cos A} \times \frac{1-\cos A}{1-\cos A}} = \sqrt{\frac{(1-\cos A)^2}{(1+\cos A)(1-\cos A)}}$

$\sqrt{\frac{(1-\cos A)^2}{(1^2-\cos^2 A)}} = \sqrt{\frac{(1-\cos A)^2}{\sin^2 A}} = \frac{(1-\cos A)}{\sin A}$

$= \frac{1}{\sin A} + \frac{\cos A}{\sin A} = \operatorname{cosec} A + \cot A$

14. Prove that : $\frac{\tan A+\sec A-1}{\tan A-\sec A+1} = \sec A+\tan A$

LHS= $\frac{\tan A+\sec A-1}{\tan A-\sec A+1}$

$= \frac{(\tan A+\sec A)-(\sec^2 A-\tan^2 A)}{\tan A-\sec A+1}$

$= \frac{(\tan A+\sec A)-(\sec A-\tan A)(\sec A+\tan A)}{\tan A-\sec A+1}$

$= \frac{(\tan A+\sec A)-(\sec A-\tan A)(\sec A+\tan A)}{\tan A-\sec A+1}$

$= \frac{(\tan A+\sec A)[1-(\sec A-\tan A)]}{\tan A-\sec A+1}$

$= \frac{(\tan A+\sec A)\cancel{[1-\sec A+\tan A]}}{\cancel{\tan A-\sec A+1}} = \sec A+\tan A$

Practice problems:

1. $\sqrt{\frac{1+\sin A}{1-\sin A}} + \sqrt{\frac{1-\sin A}{1+\sin A}}$ **=2 secA**

[Hints : Rationalising the denominator

2. $\sqrt{\frac{\sec A-1}{\sec A+1}} + \sqrt{\frac{\sec A+1}{\sec A-1}}$ **= 2cosecA**

UNIT 6 : SOME APPLICATIONS OF TRIGONOMETRY :

EXPECTED : 2/3= 1-Question = 3/4 Marks

----------Revision Notes by PRAKASH.L, HTTGGHS. CHLLAKERE..----------

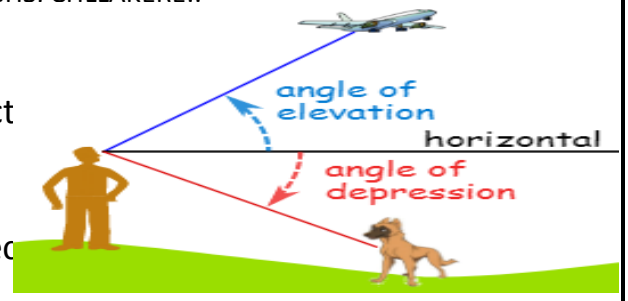

The line of sight : The line of sight is the line drawn from the eye of an observer to the point in the object viewed by the observer.

Angle of elevation : The angle of elevation of an objec viewed, is the angle formed by the line of sight with the horizontal when it is above the horizontal level, i.e., the case when we raise our head to look at the object.

Angle of depression : The angle of depression of an object viewed, is the angle formed by the line of sight with the horizontal when it is below the horizontal level, i.e., the case when we lower our head to look at the object.

Some important formulae :

$$\text{Sine of } \angle A = \frac{\text{Opposite side}}{\text{hypotenuse side}} = \frac{BC}{AC}$$

$$\text{cosines of } \angle A = \frac{\text{adjacent side}}{\text{hypotenuse side}} = \frac{AB}{AC}$$

$$\text{tangent of } \angle A = \frac{\text{opposite side}}{\text{adjacent side}} = \frac{BC}{AB}$$

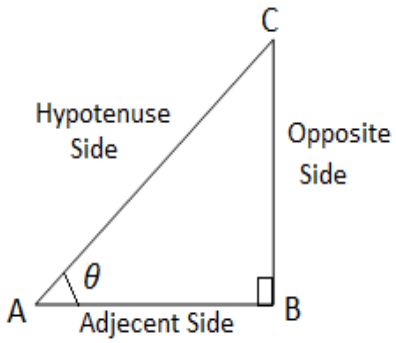

Some important trigonometric ratios of specific angles :

Angle A	30^0	45^0	60^0
sin A	$\frac{1}{2}$	$\frac{1}{\sqrt{2}}$	$\frac{\sqrt{3}}{2}$
cos A	$\frac{\sqrt{3}}{2}$	$\frac{1}{\sqrt{2}}$	$\frac{1}{2}$
tan A	$\frac{1}{\sqrt{3}}$	1	$\sqrt{3}$

Note : The height or length of an object or the distance between two distant objects can be determined with the help of trigonometric ratios.

2 – Marks questions :

1. A tower stands vertically on the ground. From a point on the ground, which is 15m away from the foot of the tower, the angle of elevation of the top of the tower is found to be 60^0. Find the height of the tower.

Ans : Here, Height of the tower = AB = ?

In right angle ΔABC ,Angle of elevation $\angle ACB = 60^0$

The distance of the point from the tower and the angle of elevation =15m

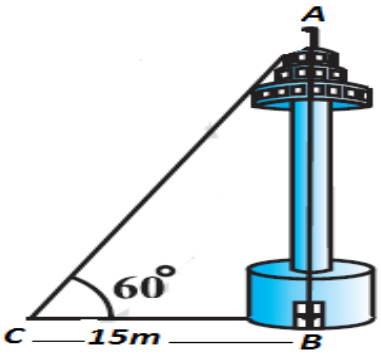

$\tan\theta = \frac{\text{opposite side}}{\text{adjacent side}} = \frac{AB}{BC} = \frac{AB}{15}$

$\tan 60^0 = \frac{AB}{15} \Rightarrow \sqrt{3} = \frac{AB}{15}$

$AB = 15\sqrt{3}$

Hence, the height of the tower $= 15\sqrt{3}$

---

2. An observer 1.5m tall is 28.5m away from a chimney. The angle of elevation of the top of the chimney from her eye is 45^0. What is the height of the chimney.

Ans : Here, Height of the chimney = AB = ?

Angle of elevation $\angle ADE = 45^0$

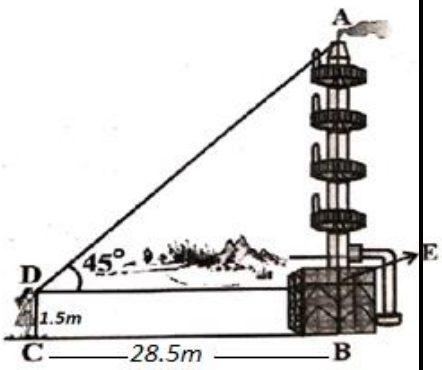

The distance between the girl and the chimney DE=CB=28.5m

The height of the girl DC = EB =1.5m

Height of the chimney AB = AE + BE

$\tan\theta = \frac{\text{opposite side}}{\text{adjacent side}} = \frac{AE}{DE} = \frac{AE}{28.5}$

$\tan 45^0 = \frac{AE}{28.5} \Rightarrow 1 = \frac{AE}{28.5}$

AE = 28.5m

So, the Height of the chimney AB = AE + BE

AB =28.5 cm + 1.5cm = 30cm.

3.A tree breakes due to storm and the broken part bends so that the top of the tree touches the ground making an angle 30^0 with it. The distance between the foot of the tree to the point where the top touches the ground is 8m. Find the height of the tree.

Ans: Broken part of the tree = BC

Height of the tree = AB+BC

Angle of elevation $\angle ACB = 30^0$

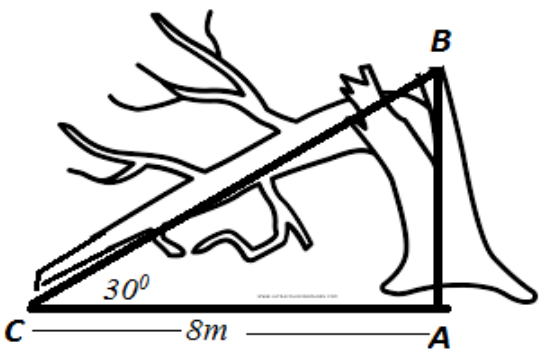

$\cos 30^0 = \frac{\text{adjacent side}}{\text{hypotenuse side}} = \frac{AC}{BC} = \frac{8}{BC}$

$\frac{\sqrt{3}}{2} = \frac{8}{BC} \Rightarrow BC = \frac{16}{\sqrt{3}}$ m

$\tan 30^0 = \frac{\text{opposite side}}{\text{adjacent side}} = \frac{AB}{AC} = \frac{AB}{8}$

$\frac{1}{\sqrt{3}} = \frac{AB}{8} \implies AB = \frac{8}{\sqrt{3}}$ m

So, height of the tree = AB + BC $= \frac{8}{\sqrt{3}} + \frac{16}{\sqrt{3}} = \frac{8+16}{\sqrt{3}} = \frac{24}{\sqrt{3}}$ m

---

Practice problems:

1.The angle of elevation of the top of a vertical tower on a level ground from a point, at a distance of $9\sqrt{3}$ m from its foot on the same ground is 60^0. Find the height of the tower.

[Kseeb model paper : 2]

2.A circus artist is climbing a 20m long rope, which is tightly stretched and tied from a vertical pole to the ground. Find the height of the pole, If the angle made by the rope with the ground level is 30^0.

3.The angle of elevation of the top of a tower from a point on the ground, which is 30m away from the foot of the tower is 30^0. Find the height of the tower.

4.A kite is flying at a height of 60m above the ground. The string attached to the kite is temporarily tied to a point on the ground. The inclination of the string with the ground is 60^0.Find the length of the string, assuming that there is no slack in the string.

5.A contractor plans to install two slides for the children to play in a park. For the children below the age of 5years, she prefers to have a slide whose top is at a height of 1.5m and is inclined at an angle of $30^0$to the ground, whereas for elder children she wants to have a steep slide at a height of 3m, and inclined at an angle of 60^0 to the ground. What should be the length of the slide in case?

3/4 – Marks questions :

---

1. The angle of elevation of the top of an unfinished vertical building on a ground, at a point which is 100m from the base of the building is 45^0. How much height the building must be raised, so that its angle of elevation from the same point be 60^0.(Take $\sqrt{3}$ =1.73)

Ans : Let, Height of the unfinished building =BC **[Kseeb modelpaper-1 :4 marks]**

height of the raised building = AB

Total height of the building = AB + BC = AC

In right angle ΔACO, $\angle AOC = 60^0$

$\tan 60^0 = \frac{\text{opposite side}}{\text{adjacent side}} = \frac{AC}{OC} = \frac{AC}{100}$

$\sqrt{3} = \frac{AC}{100} \implies AC = 100\sqrt{3} = 100 \times 1.73 = 173$m

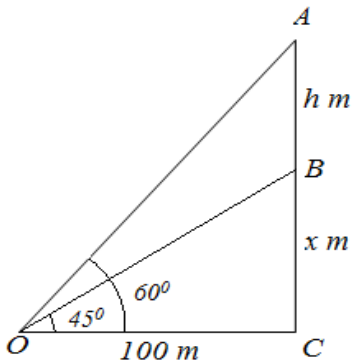

∴ The height of the building AC = 173m

In right angle Δ OCB, $\angle BOC = 45^0$

$\tan 45^0 = \frac{\text{opposite side}}{\text{adjacent side}} = \frac{BC}{OC} = \frac{BC}{100}$

$1 = \frac{BC}{100} \implies BC = 100$ m

∴ The height of the unfinished building BC = 100m

The height of the raised building = Total height – Height of the Unfinished building

=173 – 100 = 73m

∴ The height of the unfinished building BC = 73m

---

2. A 1.5m tall boy is standing at some distance from a 30m tall building. The angle of elevation from his eyes to the top of the building increases from 30^0 to 60^0 as we walks towards the building. Find the distance he walked towards the building.

Ans :

Angle of elevation when the boy is at M = 30^0

After walking ‘ x’ meters from M to N, Angle of elevation at N = 60^0

∴ MN = AB = xm

Height of the building = OC = 30m

According to question, CD = OC – OD

∴ CD = 30m – 1.5m =28.5m

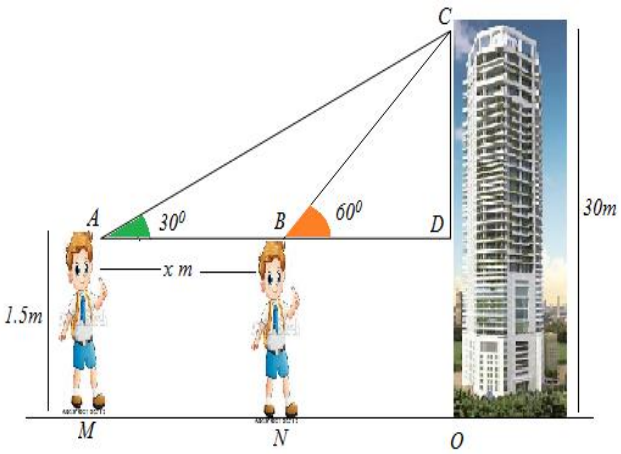

In right angle Δ ADC ,

$\tan 30^0 = \frac{\text{opposite side}}{\text{adjacent side}} = \frac{CD}{AD} = \frac{28.5}{AD}$

$\frac{1}{\sqrt{3}} = \frac{28.5}{AD} \implies AD = 28.5\sqrt{3}$ m

In right angle ΔBDC ,

$\tan 60^0 = \frac{\text{opposite side}}{\text{adjacent side}} = \frac{CD}{BD} = \frac{28.5}{BD}$

$\sqrt{3} = \frac{28.5}{BD} \implies BD = \frac{28.5}{\sqrt{3}} = \frac{3\times 9.5}{\sqrt{3}} = 9.5\sqrt{3}$ m

∴ Distance walked towards the building = MN =AD – BD $=28.5\sqrt{3}$ m $-9.5\sqrt{3}$ m

$= (28.5 - 9.5)\sqrt{3}$ m $= 19\sqrt{3}$ m

---

3. From a point on the ground, the angle of elevation of the bottom and the top of a transmission tower fixed at the top of a 20m high building are 45^0 and 60^0 respectively. Find the height of the tower.

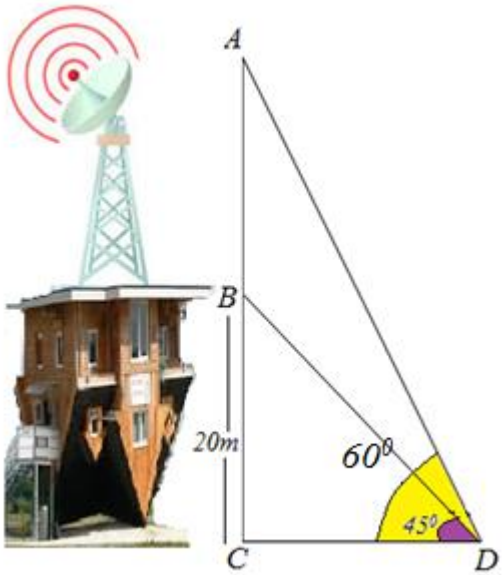

Ans :

Height of the building = BC = 20m

Height of the transmission the tower = AB = AC – BC

In right angle Δ BCD,

$\tan 45^0 = \frac{\text{opposite side}}{\text{adjacent side}} = \frac{BC}{CD} = \frac{20}{CD}$

$1 = \frac{20}{CD} \implies CD = 20m$

In right angle ΔACD,

$\tan 60^0 = \frac{\text{opposite side}}{\text{adjacent side}} = \frac{AC}{CD} = \frac{AC}{20}$

$\sqrt{3} = \frac{AC}{20} \implies AC = 20\sqrt{3}m$

Height of the transmission the tower = AB = AC – BC

$AB = 20\sqrt{3} - 20 = 20(\sqrt{3} - 1)m$

Practice problems:

1) A statue 1.6m tall stands on the top of a pedestal. From a point on the ground , the angle of elevation of the top of the statue is 60^0 and from the same point the angle of elevation of the top of the pedestal is 45^0. Find the height of the pedestal.

---

4. The angle of elevation of the top of a building from the foot of the tower is 30^0 and the angle of elevation of the top of the tower from the foot of the building is 60^0 . If the tower is 50m high, Find the height of the building

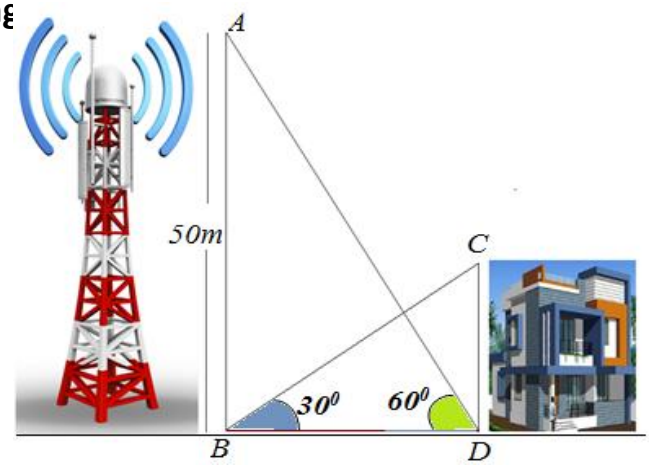

Ans :

Height of the tower =AB= 50m

Height of the building =CD= ?

Distance between the foot of the tower and building = BD

In right angle Δ ABD,

$\tan 60^0 = \frac{\text{opposite side}}{\text{adjacent side}} = \frac{AB}{BD} = \frac{50}{BD}$

$\sqrt{3} = \frac{50}{BD} \implies BD = \frac{50}{\sqrt{3}}$

In right angle Δ BDC,

$\tan 30^0 = \frac{\text{opposite side}}{\text{adjacent side}} = \frac{CD}{BD} = \frac{CD}{\frac{50}{\sqrt{3}}} = \frac{CD\sqrt{3}}{50}$

$\frac{1}{\sqrt{3}} = \frac{CD\sqrt{3}}{50} \implies CD = \frac{50}{3} = 16\frac{2}{3}$ m

∴ Height of the building = $16\frac{2}{3}$ m

Practice problems:

1)From the top of a vertical building of $50\sqrt{3}$ m height on a level ground the angle of depression of an object on the same ground is observed to be 60^0. Find the distance of the object from the foot of the building. **[June 2019]**

5.Two windmills of height 50m and $40\sqrt{3}$m are on either side of the field. A person observes the top of the windmills from a point in between them. The angle of elevation was found to be 45^0 and 30^0. Find the distance between the windmills. **[June : 2019]**

Ans :

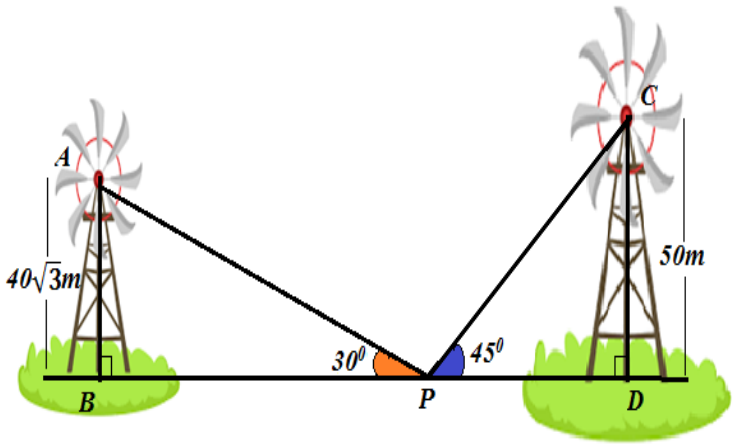

Height of the wind mill AB=$40\sqrt{3}$m

Height of the wind mill CD=50m

Distance between the windmills= BD=?

In right angle Δ ABP,

$\tan 30^0 = \frac{\text{opposite side}}{\text{adjacent side}} = \frac{AB}{BP} = \frac{40\sqrt{3}m}{BP}$

$\frac{1}{\sqrt{3}} = \frac{40\sqrt{3}m}{BP} \implies BP = 40(\sqrt{3} \times \sqrt{3})$

$= 40 \times 3$

BP = 120m

In right angle Δ CPD,

$\tan 45^0 = \frac{\text{opposite side}}{\text{adjacent side}} = \frac{CD}{PD} = \frac{50}{PD}$

$1 = \frac{50}{PD} \implies PD = 50m$

Distance between the windmills = BD = BP + PD

= 120m + 50m

= 170m

---

6. Two poles of equal heights are standing opposite each other on either side of the road, which is 80mwide. From a point between them on the road, the angles of elevation of the top of the poles are 60^0 and 30^0, respectively. Find the height of the poles and distance of the point from the poles.

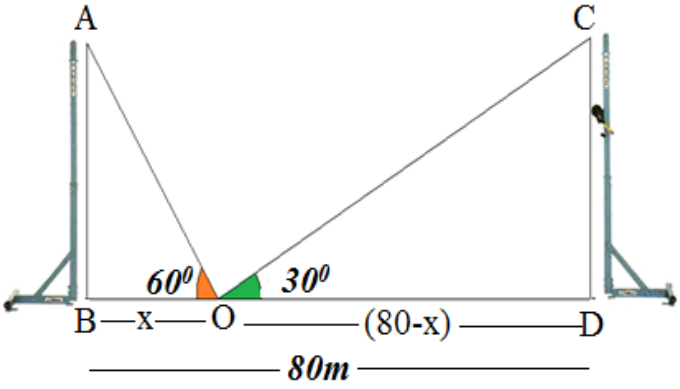

Ans :

Let AB and CD be two poles of equal height.

AB = CD

'O' be any point between the two poles.

Now, In right angle Δ ABO,

$\tan 60^0 = \frac{\text{opposite side}}{\text{adjacent side}} = \frac{AB}{BO} = \frac{AB}{x}$

$\sqrt{3} = \frac{AB}{x} \Longrightarrow \quad \therefore \quad AB = x\sqrt{3}$ --------- (1)

Now, In right angle Δ ODC,

$\tan 30^0 = \frac{\text{opposite side}}{\text{adjacent side}} = \frac{CD}{OD} = \frac{CD}{(80-x)}$

$\frac{1}{\sqrt{3}} = \frac{CD}{(80-x)} \Longrightarrow \quad \therefore \quad CD = \frac{(80-x)}{\sqrt{3}}$ ------- (2)

Given that , AB = CD $\Longrightarrow \therefore \quad x\sqrt{3} = \frac{(80-x)}{\sqrt{3}}$

$x\sqrt{3}\ (\sqrt{3}\ ) = 80 - x$

$\Longrightarrow 3x = 80 - x \Longrightarrow 3x + x = 80$

$4x = 80 \Longrightarrow x = \frac{80}{4} = 20$

$\therefore x = 20$

Put x = 20 in (1), $AB = x\sqrt{3}$ --------- (1)

$AB = 20\sqrt{3}$

∴ The height of the pole $= 20\sqrt{3}$m

The distance of the point from first pole = x = 20m.

The distance of the point from second pole = 80 – x = 80 – 20 = 60m

---

7. A 1.2m tall girls spots a balloon moving with the wind in a horizontal line at a height of 88.2m from the ground. The angle of elevation of the balloon from the eyes of the girl at any instant is 60^0. After some time, the angle of elevation reduces to 30^0.Find the distance travelled by the balloon during the interval.

Ans :

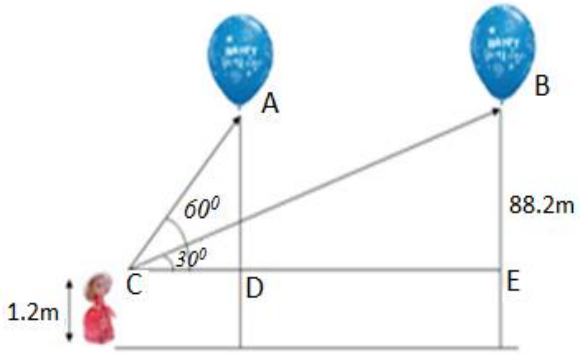

Let, initial position of the balloon be 'A'

Later position of the balloon be 'B'.

The height of the balloon

= Height of the balloon from the ground - Height o

= 88.2 – 1.2 = 87 m

The distance travelled by the balloon =DE =CE – CD

Now, In right angle Δ ADC,

$\tan 60^0 = \frac{\text{opposite side}}{\text{adjacent side}} = \frac{AD}{CD} = \frac{87}{CD}$

$\sqrt{3} = \frac{87}{CD} \implies CD = \frac{87}{\sqrt{3}} = \frac{(\sqrt{3}\times\sqrt{3})29}{\sqrt{3}} = 29\sqrt{3}$ m

In right angle Δ CBE,

$\tan 30^0 = \frac{\text{opposite side}}{\text{adjacent side}} = \frac{BE}{CE} = \frac{87}{CE}$

$\frac{1}{\sqrt{3}} = \frac{87}{CE} \implies CE = 87\sqrt{3}$ m

The distance travelled by the balloon = DE = CE – CD = $87\sqrt{3}$ m $-29\sqrt{3}$ m

$= \sqrt{3}\,(87 - 29) = 58\sqrt{3}$ m

∴ The distance travelled by the balloon = $58\sqrt{3}$ m

---

8. From a point P on the ground the angle of elevation of the top of a 10m tall building is 30^0. A flag is hoisted at the top of the building and the angle of elevation of the top of the flagstaff from P is 45^0. Find the length of the flagstaff and the distance of the building from the point P. (you may take $\sqrt{3}$=1.732)

Ans : We know, The height of the building = AB =10m

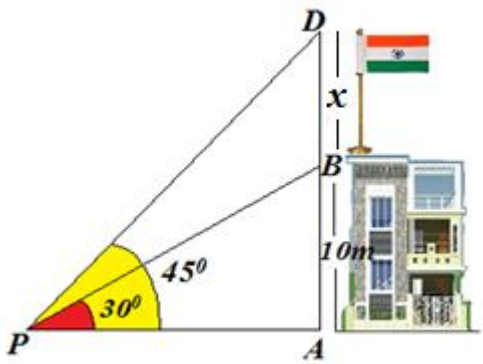

Lenghth of the flagstaff = BD = x

Distance of the building from the point P =AP=?

In the right angle ΔPAB

$\tan 30^0 = \frac{\text{opposite side}}{\text{adjacent side}} = \frac{BA}{PA} = \frac{10}{PA}$

$\frac{1}{\sqrt{3}} = \frac{10}{PA} \implies PA = 10\sqrt{3}$ m

∴ Distance of the building from the point P = AP = $10\sqrt{3}$ m

In the right angle ΔPAD

$\tan 45^0 = \frac{\text{opposite side}}{\text{adjacent side}} = \frac{DA}{PA} = \frac{10+x}{10\sqrt{3}}$

$1 = \frac{10+x}{10\sqrt{3}} \Longrightarrow 10\sqrt{3}\text{ m} = 10+x \Longrightarrow x = 10\sqrt{3} - 10 = 10(\sqrt{3}-1)$

$= 10(1.732 - 1) = 10(0.732) = 7.32\text{m}$

Lenghth of the flagstaff = BD = x=7.32m

9. From the top of a 7m high building, the angle of elevation of the top of a cable tower is 60^0 and the angle of depression of its foot is 45^0. Determine the height of the tower.

Ans : Height of the building = AB = 7m [AB = ED]

Height of the tower = CD = ?

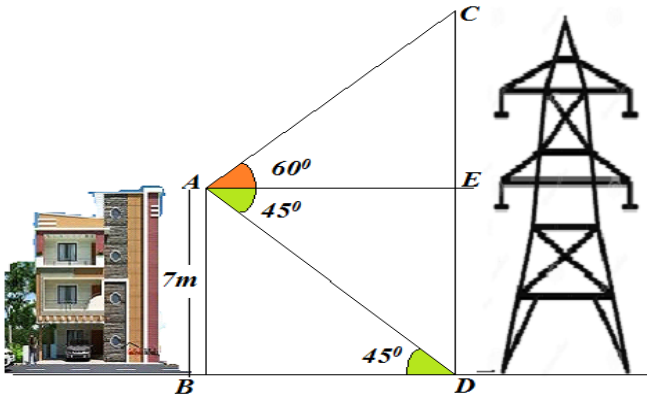

CD = CE + ED

In right angle ΔABD

$\tan 45^0 = \frac{\text{opposite side}}{\text{adjacent side}} = \frac{AB}{BD} = \frac{7m}{BD}$

$1 = \frac{7m}{BD} \Longrightarrow BD = 7m$ [BD = AE]

In right angle ΔAEC

$\tan 60^0 = \frac{\text{opposite side}}{\text{adjacent side}} = \frac{CE}{AE} = \frac{CE}{7}$

$\sqrt{3} = \frac{CE}{7} \Longrightarrow CE = 7\sqrt{3}$

∴ Height of the tower = CD = CE + ED $=7\sqrt{3} + 7 = 7(\sqrt{3}+1)$m

Practice problems :

1) A TV tower stands vertically on a bank of a canal. From a point on the other bank directly opposite the tower, the angle of elevation of the top of the tower is 60^0.From another point 20m away from this point on the line joining this point to the foot of the tower, the angle of elevation of the top of the tower is 30^0. Find the height of the tower and width of the canal.

2)As observed from the top of a 75m high lighthouse from the sea level, the angle of depression of two ships are 30^0 and 45^0. If one ship is exactly behind the other on the same side of the lighthouse, find the distance between the two ships.

3) A straight highway leads to the foot of a tower. A man standing at the top of the tower observes a car at an angle of depression of 30^0 , which is approaching the foot of the tower with a uniform speed. Six seconds later, the angle of depression of the car is found to be 60^0. Find the time taken by the car to reach the foot of tower from this point.

10)The angles of elevation of the top of a tower from two points at a distance of 4 m and 9mfrom the base of the tower and in the same straight line with it are complementary. Prove that the height of the tower is 6 m.

Ans : Height of the tower = AB

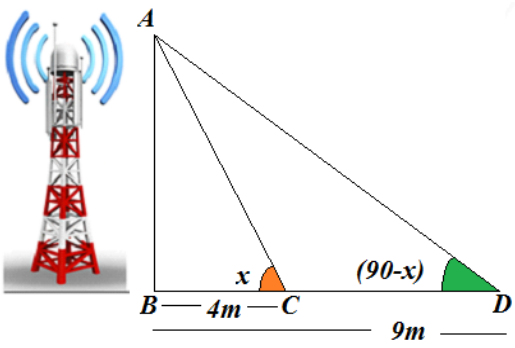

Let ∠ACB = x and ∠ADB=(90- x) are complementary angles.

In right angle ΔACB, tan x = $\frac{AB}{BC} = \frac{AB}{4}$

tan x = $\frac{AB}{4}$ ------ (1)

In right angle ΔADB, tan(90-x) = $\frac{AB}{BD} = \frac{AB}{9}$

tan(90- x) = $\frac{AB}{9}$ $\Longrightarrow$ cot x = $\frac{AB}{9}$ ------ (2)

Multiply equation (1) and (2) $\Longrightarrow$ tanx × cot x = $\frac{AB}{4} \times \frac{AB}{9}$

$$\frac{\cancel{\sin x}}{\cancel{\cos x}} \times \frac{\cancel{\cos x}}{\cancel{\sin x}} = \frac{AB^2}{36} \Longrightarrow 1 \times 36 = AB^2$$

$$\Longrightarrow AB = \sqrt{36} = 6$$

Hence, the height of the tower = 6m.

UNIT-7 : STASTICS

EXPECTED : 3 + 4=7 Marks OR 3+3=6 Marks (3-Marks for Ogive)

----------Revision Notes by PRAKASH.L, HTTGGHS, CHLLAKERE----------

- **Statistics :** Statistics is a branch of mathematics which deals with the collection, presentation and analysis of numerical data.
- Three measures of central tendency are : i) Mean ii) Mode. iii) Median
- **MEAN :** TheArithmetic mean is the average of numbers.

$$\textbf{Mean} = \frac{\textbf{The Sum of the values of all the observations}}{\textbf{Total number of observations}}$$

Direct Method : Mean = $\bar{x} = \frac{\sum f_i x_i}{\sum f_i}$

- **MODE :** The value among the observations which occurs most often,that is , the value of the observation having the maximum frequency.

The mode for grouped data can be found by using formula :

$$\textbf{Mode} = l + \left[\frac{f_1 - f_0}{2f_1 - f_0 - f_2}\right] \times h$$

- **MEDIAN :** Meadian is a measure of central endency which gives the value of the middle-most observation in the data.

The median for grouped data is formed by using the formula :

$$\textbf{Median} = l + \left[\frac{\frac{n}{2} - cf}{f}\right] \times h$$

- **There is a empirical relationship between the three measures of central tendency :**

3 Median = Mode + 2 Mean

I. MEAN OF GROUPED DATA :

Example problem 1 : Find the mean of the following data : [By Direct Method]

C.I	00- 10	10 – 20	20- 30	30 - 40	40 - 50
Frequency	3	5	9	5	3

Ans : **[Model paper – 1]**

Class interval [C. I]	Frequency [f_i]	Class mark [x_i]	$f_i x_i$
00- 10	3	5	15
10 - 20	5	15	75
20- 30	9	25	225
30 - 40	5	35	175
40 - 50	3	45	135
Total	$\sum f_i = 25$		$\sum f_i x_i = 625$

Class mark :

$$= \frac{\textbf{Upper class limit + Lower class limit}}{2}$$

$\sum f_i = 25$, $\sum f_i x_i = 625$

$$\textbf{Mean} = \bar{x} = \frac{\sum f_i x_i}{\sum f_i} = \frac{625}{25} = 25$$

$\therefore$ **Mean =** $\bar{x} = 25$

Example : 2. **Find the mean of the followind data :**

Class	Less than 20	Less than 40	Less than 60	Less than 80	Less than 100
Frequency	15	37	74	99	120

Ans :

Class interval [C. I]	Frequency [f_i]	Class mark [x_i]	$f_i x_i$
00- 20	15	10	150
20 - 40	22	30	660
40- 60	37	50	1850
60 - 80	25	70	1750
80- 100	21	90	1890
Total	$\sum f_i = 120$		$\sum f_i x_i = 6300$

$\sum f_i = 120, \quad \sum f_i x_i = 6300$

Mean = $\bar{x} = \frac{\sum f_i x_i}{\sum f_i} = \frac{6300}{120} = 52.5$

$\therefore$ **Mean = $\bar{x}$ = 52.5**

Example : 3.The following distribution shows the daily pocket allowance of children of locality. The mean pocket allowance is ₹18. find the missing frequency f.

Daily pocket allowance (in**₹**)	11 - 13	13 - 15	15 - 17	17 - 19	19 - 21	21- 23	23 - 25
Number of children	7	6	9	13	f	5	4

Ans :

Class interval [C. I]	**Frequency [f_i]**	**Class mark [x_i]**	**$f_i x_i$**
11 - 13	7	12	84
13 - 15	6	14	84
15 - 17	9	16	144
17 - 19	13	18	234
19 - 21	f	20	20f
21- 23	5	22	110
23 - 25	4	24	96
Total	**$\sum f_i = 44 + f$**		**$\sum f_i x_i = 752+20f$**

Mean = $\bar{x} = 18, \quad \sum f_i = 44 + f, \quad \sum f_i x_i = 752 + 20f$,

$$\textbf{Mean} = \bar{x} = \frac{\sum f_i x_i}{\sum f_i}$$

$$18 = \frac{752+20f}{44+f}$$

$$18(44+f) = 752 + 20f$$

$$792 + 18f = 752 + 20f$$

$$792 - 752 = 20f - 18f$$

$$40 = 2f \quad \Rightarrow \quad f = \frac{40}{2} = 20$$

$$\therefore \mathbf{f = 20}$$

For Practice :

1. The mean of the following frequency distribution is 25. Fnd the value of p.

Class interval	0 - 10	10 - 20	20 - 30	30 - 40	40 - 50
Frequency	4	6	10	6	p

Example : 4. A class teacher has the following absentee record of 40 students of a class for the whole term. Find the mean number of days a student was absent.

Number of days	0 - 6	6 - 10	10 - 14	14 - 20	20 - 28	28 - 38	38 - 40
Number of students	11	10	7	4	4	3	1

Ans:

Class interval [C. I]	**Frequency [f_i]**	**Class mark [x_i]**	**$f_i x_i$**
0 - 6	11	3	33
6 - 10	10	8	80
10 - 14	7	12	84
14 - 20	4	17	68
20 - 28	4	24	96
28 - 38	3	33	99
38 - 40	1	39	39
Total	**$\sum f_i = 40$**		**$\sum f_i x_i = 499$**

$$\sum f_i = 40, \qquad \sum f_i x_i = 499$$

$$\textbf{Mean} = \bar{x} = \frac{\sum f_i x_i}{\sum f_i}$$

$$= \frac{499}{40} = 12.475 \qquad \therefore \textbf{Mean} = \bar{x} = \mathbf{12.475}$$

Practice Questions :

1. The marks obtained by 30students of class X of a certain school in mathematics paper consisting of 100 marks are presented in the table below. Find the mean of the marks obtained by the students.

Class interval	10 - 25	25 – 40	40 - 55	55 - 70	70 – 85	85 - 100
No.of students	2	3	7	6	6	6

2. Find the mean of the followind data :

Percentage of female teachers	15 - 25	25 - 35	35 - 45	45 - 55	55 - 65	65 - 75	75 - 85
No. of states	6	11	7	4	4	2	1

3. Find the mean of the following data :

Class interval	0 -20	20 – 40	40 - 60	60 - 80	80 – 100	100 - 120
Frequency	6	8	10	12	8	6

4.On annual day of a school, 400 students participated in the function. Frequency distribution showing their ages is as shown in the following table :

Ages(in years)	05-07	07-09	09-11	11-13	13-15	15-17	17-19
Number of students	70	120	32	100	45	28	5

Find the mean of the above data.

5.Find the mean of the following frequency distribions :

Classes	0 - 10	10 - 20	20 - 30	30 – 40	40 - 50	50 - 60	60 - 70
Frequency	3	8	10	15	7	4	3

6.Consider the following distribution of a daily wages of 50 workers of a factory.

Daily wages (in Rs)	500 - 520	520 - 540	540 - 560	560 - 580	580 - 600
Number of workers	12	14	8	6	10

Find the mean daily wages of the workers of the factory by using an appropriate method.

7. The following table gives the literacy rate (in percentage) of 35 cities. Find the mean literacy rate.

Literacy rate (In %)	45 - 55	55 - 65	65 - 75	75 – 85	85 - 95
Number of cities	3	10	11	8	3

8. A survey was conducted by a groupof students as a part of their environment awareness programme, in which they collected the following data regarding the number of plants in 20 houses ina locality. find the mean number of plants per house.

number of plants	0 - 2	2 – 4	4 - 6	6 - 8	8 - 10	10 - 12	12 - 14
Number of houses	1	2	1	5	6	2	3

9.Thirty women were examined in a hospital by a doctor and the number of heart beats per minute were recorded and summarised as follows. Find the mean heart beats per minute for these women, choosing suitable method.

number of heart beats per minute	65 - 68	68 – 71	71 - 74	74 - 77	77 - 80	80 – 83	83 - 86
Number of womens	2	4	3	8	7	4	2

10. The table below shows the daily expenditure on food of 25 households in a locality.

Daily expenditure (in ₹)	100 - 150	150 - 200	200 - 250	250 - 300	300 - 350
Number of households	4	5	12	2	2

Find the mean daily expenditure on food by a suitable method.

11. In retail market, fruit vendors wereselling mangoes kept in packing boxes. These boxes contained varying number of mangoes. The following was the distribution of mangoes according to the number of boxes.

Number of mangoes	50 - 52	53 - 55	56 - 58	59 – 61	62 - 64
Number of boxes	15	110	135	115	25

12.Find the Concentration of SO_2 in the air (in parts per million, i.e., ppm), the data was collected for 30 localities in a certain city and in presented below:

Concentration of SO_2 (in ppm)	**Frequency**
0.00 – 0.04	4
0.04 – 0.08	9
0.08 – 0.12	9
0.12 – 0.16	2
0.16 – 0.20	4
0.20 – 0.24	2

13.The distribution below shows the number of wickets taken by bowlers in one day cricket matches. Find the mean number of wickets by choosing a suitable method.

Number of wickets	20 - 60	60 - 100	100 - 150	150 - 250	250 - 350	350- 450
Number of bowlers	7	5	16	12	2	3

II. MODE OF GROUPED DATA :

Formula to find the Mode is: **Mode** = $l + \left[\frac{f_1 - f_0}{2f_1 - f_0 - f_2}\right] \times h$

Modal class : Class with the maximum frequency is called modal class

l = lower limit of the modal class,

h = Size of the class interval,

f_1= frequency of the modal class,

f_0 = frequency of the class preceding the modal class,

f_2 = frequency of the class succeeding the modal class.

Example problems : **[3 - Marks]**

1. Find the mode of the following frequency distribution.

Class	10 -25	25 - 40	40 - 55	55 - 70	70 - 85	85 - 100
Frequency	2	3	7	6	6	6

AnS : **[March/April -2019]**

Class	**Frequency (f_i)**
10 - 25	2
25 - 40	3 - f_0
l - 40 - 55	7 = f_1
55 - 70	6 - f2
70 - 85	6
85 - 100	6

Modal class = 40 – 55

Maximum frequency = **f1** = 7

frequency of the class preceding the modal class = $\mathbf{f_0 = 3}$

frequency of the class succeeding the modal class= $\mathbf{f_2 = 6}$

Lower limit of the modal class= ***l* = 40**

Size of the class interval = **h =15**

$$\textbf{Mode} = l + \left[\frac{f_1 - f_0}{2f_1 - f_0 - f_2}\right] \times h$$

$$= 40 + \left[\frac{7-3}{2(7)-3-6}\right] \times 15$$

$$= 40 + \left[\frac{4}{14-9}\right] \times 15$$

$$= 40 + \left[\frac{4}{\cancel{5}}\right] \times \cancel{15}^{\,3}$$

$$= 40 + 12 = 52 \quad \therefore \textbf{ Mode = 52}$$

Practice problems : -

1. Asurvey conducted on 20 households in a locality by a group of students resulted in the following frequency table for the number of family members in a household:

Family size	1 - 3	3 - 5	5 - 7	7 – 9	9 - 11
Number of families	7	8	2	2	1

Find the mode of this data.

2.The following table shows the shows the ages of the patients admitted in a hospital during a year:

Age (in year)	1 - 15	15 - 25	25 - 35	35 – 45	45 - 55	55 - 65
Number of patients	6	11	21	23	14	5

Find the mode and the mean of the data given above.

3.The following data gives the information on the observed lifetimes(in hours) of 225 electrial components:

Lifetimes (in hours)	0 - 20	20 - 40	40- 60	60 – 80	80 - 100	100 - 120
Frequency	10	35	52	61	38	29

4. A student noted the number of cars passing through a spot on a road for 100 periods

Number of cars	0 - 10	10 - 20	20- 30	30 – 40	40 - 50	50 - 60	60 - 70	70 - 80
Frequency	7	14	13	12	20	11	15	8

each of 3minutes and summerised it in the table given below. Find the mode of the data

5.The data regarding marks obtained by 48 students of a class in a class test is given below. Calculate the modal marks of students.

Marks obtained	0 - 5	5 - 10	10- 15	15 – 20	20 - 25	25 - 30	30 - 35	35- 40	40 - 45	45 - 50
Number of students	1	0	2	0	0	10	25	7	2	1

6. In the following frequency distribution, find the median class.

Height (in cm)	140 - 145	145 - 150	150 - 155	155 - 160	160 - 165	165 - 170
Frequency	7	14	13	12	20	11

7.Given below is the distribution of weekly pocket money received by students of a class. Calculate the pocket money that is received by most of the students.

Pocket money (in RS)	0 - 20	20- 40	40 - 60	60 - 80	80 - 100	100- 120	120 - 140
Number of students	2	2	3	12	18	5	2

8. The following data gives the distribution of total monthly household expenditureof 200 families of a village. Find the modal monthly expenditure of the families. And find the mean monthly expenditure :

Expenditure (in Rs)	Number of families
1000 – 1500	24
1500 – 2000	40
2000 – 2500	33
2500 – 3000	28
3000 – 3500	30
3500 – 4000	22
4000 – 4500	16
4500 – 5000	7

9.The following distribution gives the state-wise teacher-student ratio in higher secondary school of India. Find the mode and mean of this data.

Number of students per teacher	Number of states
15 – 20	3
20 – 25	8
25 – 30	9
30 – 35	10
35 – 40	3
40 – 45	0
45 – 50	0
50 – 55	2

10. The given distribution shows the number of runs scored by top batsmen of the world in one-day international cricket matches.

Runs scored	Number of batsmen
3000 – 4000	4
4000 – 5000	18
5000 – 6000	9
6000 – 7000	7
7000 – 8000	6
8000 – 9000	3
9000 – 10000	1
10000 – 11000	1

Find the mode of the data.

III. MEDIAN OF GROUPED DATA :

The median for grouped data is formed by using the formula :

$$\textbf{Median} = l + \left[\frac{\frac{n}{2} - cf}{f}\right] \times h$$

n = number of observations,

l = lower limit of median class,

cf = cumulative frequency of class preceding the median class,

f = frequency of median class

h = Class size (assuming class size to be equal)

Example : 1.Find the median of the following frequency distribution.

Class	Frequency (f_i)
1 – 4	**6**
4 – 7	**30**
7 – 10	**40**
10 – 13	**16**
13 – 16	**4**
16 – 19	**4**

[March/April -2019]

Ans :

Class	Frequency (f_i)	cumulative frequency (cf)
1 – 4	6	**6**
4 – 7	30	(6 + 30) = **36 - cf**
L = 7 – 10	**40 - f**	**(36 + 40) = 76**
10 – 13	16	(76 + 16) = **92**
13 – 16	4	(92 + 4) = **96**
16 – 19	4	(96 + 4) = **100**
Total	**$\sum f_i$ = n = 100**	

number of observations = **n** =100, $\frac{n}{2} = \frac{100}{2} = \mathbf{50}$ $\therefore \frac{n}{2} = \mathbf{50}$ **[** 50 belongs to the class 7 – 10**]**

frequency of median class = **f = 40**

lower limit of median class = ***l* = 7**

cumulative frequency of class preceding the median class = **cf = 36**

Class size = **h = 3**

$$\textbf{Median} = l + \left[\frac{\frac{n}{2} - cf}{f}\right] \times h$$

$$= 7 + \left[\frac{50-36}{40}\right] \times 3$$

$$= 7 + \left[\frac{14}{40}\right] \times 3$$

$$= 7 + \left[\frac{7}{20}\right] \times 3 = 7 + \frac{21}{20} = 7 + 1.05 = 8.05$$

Median = 8.05

Practice problems : -

1. Calculate the median from the following data: **[March/April -2019 RR]**

Weight (in kg)	15 - 20	20 - 25	25 - 30	30 – 35	35 - 40
Number of students	2	3	6	4	5

2. The distribution below gives the weights of 30 students of a class.Find the median weight of the students.

Weights (in kg)	40- 45	45 – 50	50 - 55	55 - 60	60 - 65	65 - 70	70 - 75
Number of students	2	3	8	6	6	3	2

3.100 surnames were randomly picked up from a local telephone directory and the frequency distribution of the number of letters in the English alphabets in the surnames was obtained as follows :

Number of letters	1 - 4	4 – 7	7 - 10	10 - 13	13 - 16	16 - 19
Number of surnames	6	30	40	16	4	4

Determine the median number of letters in the surname.

4. The following table gives the distribution of the life time of 400 neon lamps:

Life time(in hours)	Number of lamps
1500 – 2000	14
2000 – 2500	56
2500 – 3000	60
3000 – 3500	86
3500 – 4000	74
4000 – 4500	62
4500 – 5000	48

Find the median life time of a lamp.

5.Find the median of the following frequency distribution :

Class	0 – 10	10 – 20	20 – 30	30 – 40	40 – 50	50 – 60	60 – 70
Frequency	3	8	10	15	7	4	3

Example problem :

1.If the median of the distribution given below is 28.5, find the value of x and y.

Class interval	**Freuency**
0 – 10	5
10 – 20	x
20 – 30	20
30 – 40	15
40 – 50	y
50 – 60	5
Total	**60**

Ans :

Class interval (C.I)	Freuency (f_i)	cumulative frequency (cf)
0 – 10	5	5
10 – 20	x	5 + x
20 – 30	**20 = f**	**5 + x + 20 = 25 x**
30 – 40	15	**25 x** + 15 = 40 + x
40 – 50	y	40 + x +y
50 – 60	5	40+ x + y +5 = 45 + x + y
Total	**n = 60**	**45 + x + y**

Number of observations = **n** = 45 + x + y,

60 = 45+x+y

x+y = 60 – 45 =15

x+y = 15 ---------- (1)

$\frac{n}{2} = \frac{60}{2} = \mathbf{30}$ $\therefore \frac{n}{2} = \mathbf{30}$

The median is 28.5, which lies in the class 20 - 30

frequency of median class = **f = 20**

lower limit of median class = **l = 20**

cumulative frequency of class preceding the median class = **cf = 5 + x**

Class size = **h = 10,** **Median = 28.5**

Median = $l + \left[\frac{\frac{n}{2} - cf}{f}\right] \times h$

$28.5 = 20 + \left[\frac{30-(5+x)}{20}\right] \times 10$

$= 20 + \left[\frac{30-5-x}{20}\right] \times 10$

$= 20 + \left[\frac{25-x}{20}\right] \times 10$

$= 20 + \frac{25-x}{2} = \frac{40+25-x}{2} = \frac{65-x}{2}$

$28.5 = \frac{65-x}{2}$

(28.5)2 = 65 – x

57 = 65 – x

x = 65 – 57

x = 8

Substitute x = 8 in (1)

x + y = 15 ---------- (1)

8 + y = 15

y = 15 – 8 = 7

x = 8, y=7

Example problem : 2.A life insurance agent found the following data for distribution of ages of 100 policy holders. Calculate the median age, If policies are given only to persons having age 18 years onwards but less than 60 years.

Age(in years)	Number of policy holders
Below 20	2
Below 25	6
Below 30	24
Below 35	45
Below 40	78
Below 45	89
Below50	92
Below 55	98
Below 60	100

[HINT : Here Number of policy holder is the Cummulative Frequency. Find the frequency (f) with the help of this Cf]

Ans :

Age(in years)	frequency	Number of policy holders (c f)
15 – 20	2 – 0 = 2	2
20 – 25	6 – 2 = 4	6
25 – 30	24 – 4 = 18	24
30 – 35	45 – 24= 21	45**= cf**
35 – 40	**78 – 45 = 33 = f**	**78**
40 – 45	89 – 78 = 11	89
45 – 50	92 – 89 = 3	92
50 – 55	98 – 92 = 6	98
55 – 60	100 – 98 = 2	100
Total	**n = 100**	

number of observations = **n** =100,

$\frac{n}{2} = \frac{100}{2} =$ **50** $\therefore \frac{n}{2} =$ **50** **[** 50 belongs to the class 35- 45**]**

frequency of median class = **f = 33**

lower limit of median class = **l = 35**

cumulative frequency of class preceding the median class= **cf = 45**

Class size = **h = 5**

Median = $l + \left[\frac{\frac{n}{2} - cf}{f}\right] \times h$

$= 35 + \left[\frac{50-45}{33}\right] \times 5$

$= 35 + \left[\frac{5}{33}\right] \times 5$

$= 35 + \left[\frac{25}{33}\right]$

$= 35 + 0.7575 = 35.76$

Median = 35.76

Practice problems : 1). The following frequency distribution gives the monthly consumption of electricity of 68 consumers of a locality. Find the median, mean and mode of the data and compare them.

Monthly consumption(in units)	Number of Consumers
65 – 85	4
85 – 105	5
105 – 125	13
125 – 145	20
145 – 165	14
165 – 185	8
185 – 205	4

2. The mode of the following distribution table is 15. Find the mean of this data, and then find the median value by using emphirical formula relating mean, median and mode.

C. I	Number of workers
1 – 5	7
5 – 9	2
9 – 13	2
13 – 17	8
17 – 21	1

[Kseeb model paper – 2 : 4-Marks]

Ans : To find Mean

Class interval [C. I]	**Frequency [f_i]**	**Class mark [x_i]**	**$f_i x_i$**
1 – 5	7	3	21
5 – 9	2	7	14
9 – 13	2	11	22
13 – 17	8	15	120
17 – 21	1	19	19
Total	**$\sum f_i = 20$**		**$\sum f_i x_i = 196$**

$\sum f_i = 20$, **$\sum f_i x_i = 196$**

Mean = $\bar{x} = \frac{\sum f_i x_i}{\sum f_i}$

$= \frac{196}{20} = \frac{49}{5}$ ∴ **Mean = $\bar{x}$ = 9.8**

Mean = 9.8, Mode = 15.

By emphirical formula : 3 Median = Mode + 2Mean

3 Median = 15 + 9.8

3 Median = 15 + 9.8 = 24.8

3 Median = 24.8

Median = $\frac{24.8}{3}$ =8.266 = 8.27

Median = 8.2

UNIT-8 : SURFACE AREAS AND VOLUMES :

EXPECTED 1 + 2 + 3/4= 6 Marks OR 1 + 5 = 6 OR 1+2+4= 7Marks

----------Revision Notes by PRAKASH.L, HTTGGHS, CHLLAKERE----------

CUBE: *A symmetrical three dimensional shape, having equal length, breadth and height are called cube.*

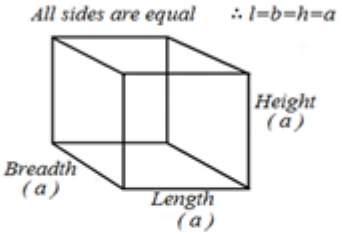

Lateral surface area = LSA = $4a^2$

(Area of four walls of a room)

Total surface area=TSA =$6a^2$

Volume : a^3 (a is the edge of the cube)

Diagonals of cube = $\sqrt{3}\,a$

CUBOID : *A cuboid is a solid figure having six faces, opposite faces are congruent.*

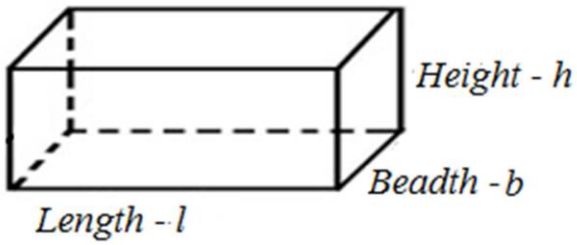

Lateral surface area = LSA = 2h(l+b)

(Area of four walls of a room)

Total surface area=TSA=2(lb+bh+hl)

Volume : lbh

Diagonals of cuboid = $\sqrt{l^2 + b^2 + h^2}$

CYLINDER : *A cylinder is a solid or a hollow object that has a circular base and a circular top of the same size.* ***OR***

If a rectangle revolves about one of its sides and completes a full rotation the solid formed is called a right circular cylinder.

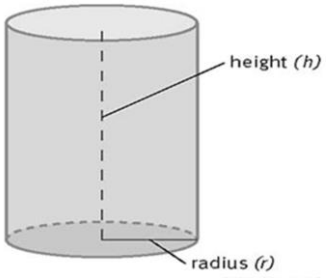

LSA (or) CSA of cylinder = $2\pi rh$

Total Surface Area = LSA+ Area of two circles

$=2\pi rh + 2\pi r^2$

TSA = $2\pi r\,(h+r)$

Volume of cylinder = $\pi r^2 h$

HOLLOW CYLINDER :

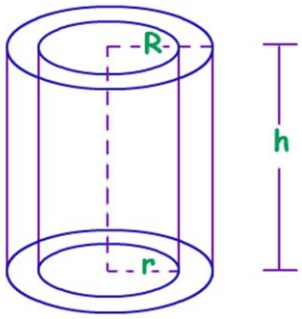

Thickness of cylinder = R – r

Area of cross section = $\pi(R^2 - r^2)$

Exrernal CSA = $2\pi Rh$

Internal CSA = $2\pi rh$

TSA = External CSA + Internal CSA+ Area of two ends

TSA = $2\pi Rh+2\pi rh+2\pi(R^2 - r^2)$

Volume =$\pi(R^2 - r^2)h$

CONE : *A cone is a three dimensiona geometrical shape that than taper smoothly.*

OR

If a right angled triangle is revolved about one of the side containing the right angle the solid formed is called a circular cone.

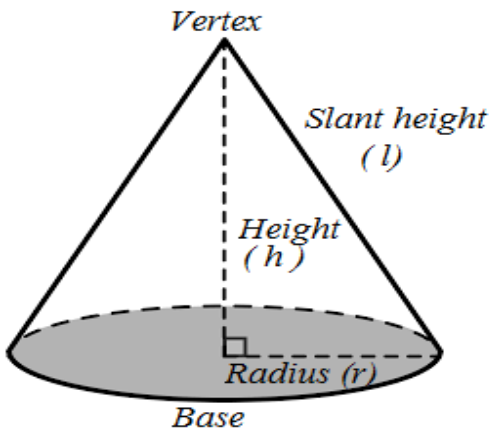

CSA (or) LSA $= \pi rl$

TSA $= \pi rl + \pi r^2 = \pi r(r + l)$

Volume $= \frac{1}{3}\pi r^2 h$

Slant height $= l = \sqrt{r^2 + h^2}$

FRUSTUM OF THE CONE : *If a right circular cone is cut off by a plane parallel to its base,and the upper smaller cone is removed then the remaining part of the cone containing the base is called a frustum of a cone.*

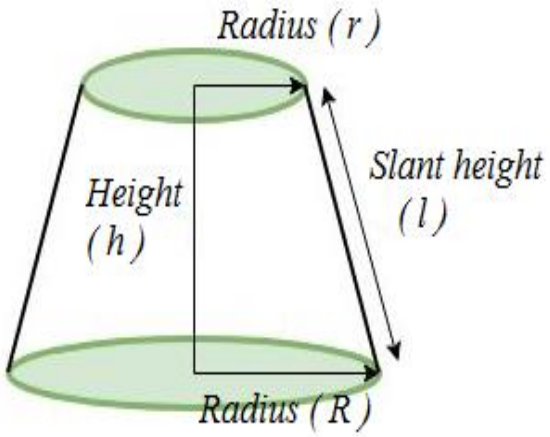

Slant height $= l = \sqrt{h^2 + (r_1 - r_2)^2}$

Lateral Surface Area $= \pi(r_1 + r_2)l$

TSA =[LSA + Area of base + Area of upper portion]

TSA $= \pi[r_1^2 + r_2^2 + (r_1 + r_2)l]$

Volume $= \frac{1}{3}\pi h[r_1^2 + r_2^2 + r_1 r_2]$

SPHERE : *A Sphere is a perfectly round geometrical object in three dimensional space. that is the surface of a completely round ball* ***OR***

If circular disc is rotated about one of its diameters, the solid so formed is called sphere.

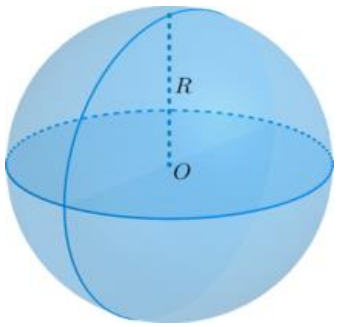

Area of Curved Surface (CSA) $= 4\pi r^2$

Total surface area (TSA) $= 4\pi r^2$

Volume $= \frac{4}{3}\pi r^3$

HEMISPHERE : *A hemisphere is a half of a Sphere.*
OR

The sphere divided into two equal parts each part of the sphere is called a Hemisphere .

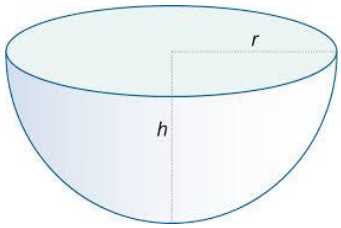

Area of Curved Surface (CSA) $= 2\pi r^2$

Total surface area (TSA) = CSA + Area of circle

$= 2\pi r^2 + \pi r^2 = 3\pi r^2$

Volume $= \frac{2}{3}\pi r^3$

SPHERICAL SHELL : *Spherical shell is the region between two concentric spheres of differing radii.* ***OR***

A solid enclosed between two concentric Spheres is called a spherical shell.

For Spherical shell 'R' and 'r' are the outer and inner radii respectively.

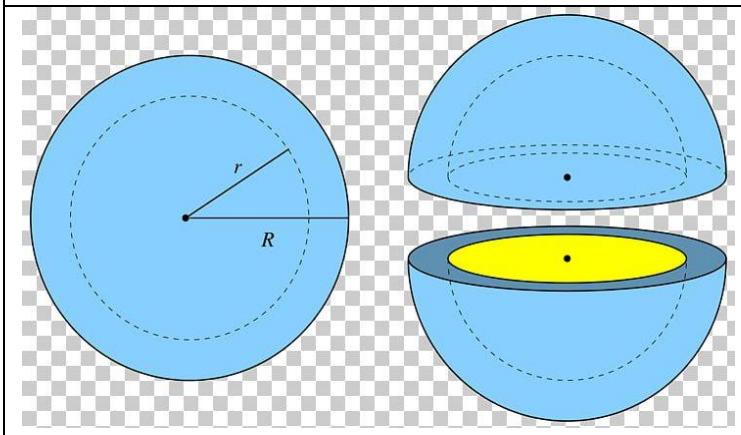

Surface area (outer) = $4\pi R^2$

Thickness of Spherical shell = $R - r$

Volume of Spherical shell= $\frac{4}{3}\pi R^3 - \frac{4}{3}\pi r^3$

$= \frac{4}{3}\pi(R^3 - r^3)$

HEMISPHERICAL SHELL :

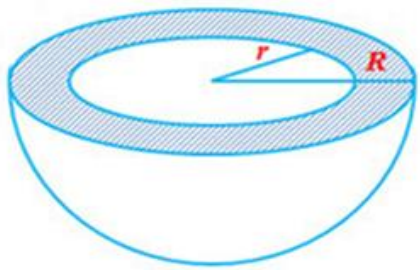

Area of base = $\pi(R^2 - r^2)$

External CSA = $2\pi R^2$

Internal CSA = $2\pi r^2$

TSA = External CSA + Internal CSA + Area of base

$TSA = 2\pi R^2 + 2\pi r^2 + \pi(R^2 - r^2)$

(OR) $TSA = \pi(3R^2 - r^2)$

Volume = $\frac{2}{3}\pi(R^3 - r^3)$

Some important Formulae :

Sl. No	Name of solid	Curved surface areaSA (or) Lateral Surface Area	Total surface area	Volume
1	**CUBOID**	$2h(l+b)$	$2(lb+bh+hl)$	lbh
2	**CUBE**	$4a^2$	$6a^2$	a^3
3	**CYLINDER**	$2\pi rh$	$2\pi r(h+r)$	$\pi r^2 h$
4	**CONE**	Πrl [Slant height = $l = \sqrt{r^2 + h^2}$]	$\pi r(r+l)$	$\frac{1}{3}\pi r^2 h$
5	**FRUSTUM OF THE CONE**	$\pi(r_1+r_2)l$ Where, $l = \sqrt{h^2 + (r_1 - r_2)^2}$	$\pi[r_1^2 + r_2^2 + (r_1+r_2)l]$	$\frac{1}{3}\pi h[r_1^2 + r_2^2 + r_1 r_2]$
6	**SPHERE**	$4\pi r^2$	$4\pi r^2$	$\frac{4}{3}\pi r^3$
7	**HEMISPHERE**	$2\pi r^2$	$3\pi r^2$	$\frac{2}{3}\pi r^3$

I . Surface area of a combination of solid :

Example problems :

1. A wooden toy rocket is in the shape of a cone mounted on a cylinder, as shown in the fig. The height of the entire rocket is 26cm., while the height of the conical part is 6cm. The base of the conical portion has a diameter 5cm.While the base diameter of the cylindrical portion is 3cm. If the conical portion is to be painted orange and the cylindrical portion yellow, find the area of the rocket painted with each other of these colours. (Take π = 3.14)

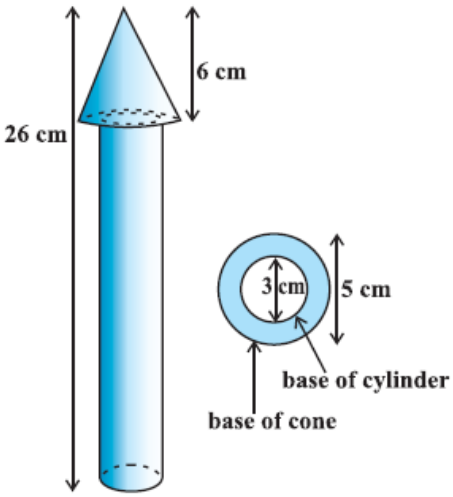

Ans : Radius of the cone $= r = \frac{d}{2} = \frac{5}{2} = 2.5$cm

Slant height of the cone = l

Height of the cone = h =6cm

Slant height of the cone= $l = \sqrt{r^2 + h^2} = \sqrt{(2.5)^2 + 6^2}$

$= \sqrt{6.25 + 36} = \sqrt{42.25} = 6.5$cm

Radius of cylinder = $r^l = \frac{d}{2} = \frac{3}{2} = 1.5$cm

Height of the cylinder= h^l = 26cm – 6cm =20cm

π = 3.14

The area to be painted orange (Conical portion) =

= CSA of cone + base area of cone –base area of cylinder

$= \pi rl + \pi r^2 - \pi(r^l)^2 = \pi[rl + r^2 - (r^l)^2]$

$= \pi[(2.5\times6.5) + (2.5)^2 - (1.5)^2] = \pi[16.25+6.25 - 2.25] = 3.14\ (20.25) = 63.585\text{cm}^2$

The area to be painted yellow (Cylinder portion) =

= CSA of cylinder + area of one base of the cylinder

$= 2\pi r^l h^l + \pi(r^l)^2 = \pi r^1[2h^l + r^l]$

$= (3.14\times1.5)\ (2 \times 20 + 1.5) = 4.71 \times 41.5$

$= 195.465\text{cm}^2$

Practice problems with Hints :

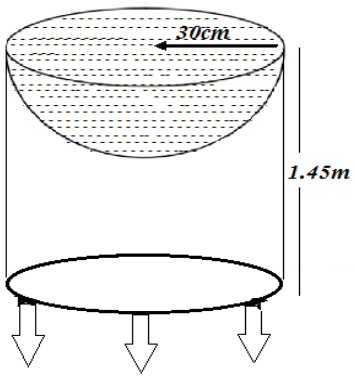

1**) Mayanka made a bird-bath for his garden in the shape of a cylinder with a hemispherical depression at one end. The height of the cylinder is 1.45m and its radius is 30cm. Find the total surface area of the bird-bath.(Take π=3.14)**

Ans : Let The height of the cylinder =h =1.45m =145cm

Radius = r=30cm, π=3.14

Total surface area of the bird-bath

= CSA of cylinder + CSA of hemisphere

$= 2\pi rh + 2\pi r^2 = 2\pi r[h + r] =$ **[Answer = 33000 cm^2 / 3.3 m^2]**

2)A vessel is in the form of a hollow hemisphere mounted by ahollow cylinder. The diameter of the hemisphere is 14cm and the total height of the vessel is 13cm.Find the inner surface area of the vessel.

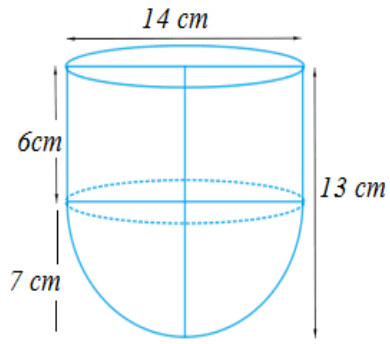

Ans : Radius of the hemisphere =Radius of the cylinder = $\frac{14}{2}$ =7cm

The height of the cylinder = 13cm – 7cm =6cm, $\pi = \frac{22}{7}$

The inner surface area of the vessel =

= The inner surface area of the cylinder + The inner surface of the hemisphere

$= 2\pi rh + 2\pi r^2 = 2\pi r[h + r]$

= **[Answer = 572 cm^2]**

---

3) 2 cubes of volumes 64cm^3 are joined end to end. Find the surface area of the resulting cuboid.

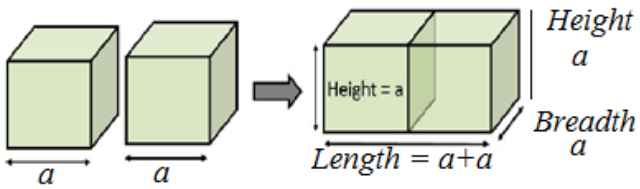

Ans : The volume of each cube = a^3 =64cm^3

$\Rightarrow a^3 = 4^3 \Rightarrow a = 4$cm

∴ The length of the side of a cube = a = 4cm

∴ length= 4cm, Bredth = 4cm, height = 4cm

The surface area of the cuboid = 2(lb + bh + hl)

= **[Answer = 160cm^2]**

---

4) A toy is in the form of a cone of radius 3.5cm mounted on a hemisphere of same radius. The total height of the toy is 15.5cm. Find the total surface area of the toy.

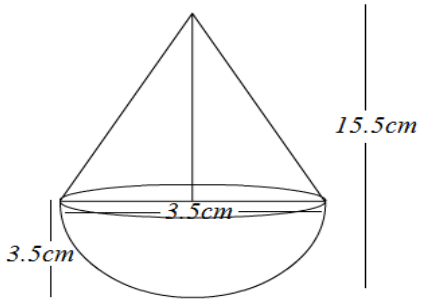

Ans: Radius of cone / hemisphere = r =3.5cm

Height of the cone = h =15.5 – 3.5 = 12cm, $\pi = \frac{22}{7}$

Slant height =l = $\sqrt{r^2 + h^2}$ = $\sqrt{(3.5)^2 + 12^2}$

l = $\sqrt{12.25 + 144}$ =$\sqrt{156.25}$ = 12.5.5cm

Total surface area of the toy = CSA of cone+CSA of hemisphere

$= \pi rl + 2\pi r^2$

= **[Answer = 214.5cm^2]**

---

5) A cubical block of side 7cm is surmounted by a hemisphere.What is the greatest diameter the hemisphere can you have ? Find the surface area of the solid?

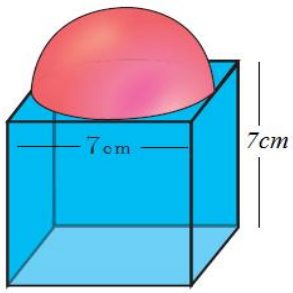

Ans : The greatest diameter of the hemisphere = side of the square

side of the square = a = 7cm, $\pi = \frac{22}{7}$

diameter of the hemisphere = r = $\frac{7}{2}$ = 3.5 cm

Surface area of the solid = Surface area of cube + CSA of hemisphere

– The area of the circular base of the hemisphere

$= 6a^2 + 2\pi r^2 - \pi r^2$

= **[Answer = 332.5cm^2]**

---

6) A hemispherical depression is cut out from one face of a cubical wooden block such that the diameter l of the hemisphere is equal to the edge of the cube. Determine the surface area of the remaining solid.

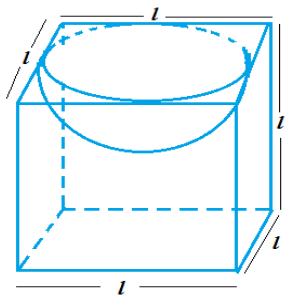

Ans : Diameter of the hemisphere = side of the square

side of the square = a = l, $\pi = \frac{22}{7}$

Radius of the hemisphere = r = $\frac{l}{2}$

Surface area of the solid = Surface area of cube + CSA of hemisphere

– The area of the circular base of the hemisphere

$= 6l^2 + 2\pi r^2 - \pi r^2$

= **[Answer = $\frac{l^2}{4}(24 + \pi)$]**

---

7) A medicine capsule is in the shape of a cylinder with two hemispheres stuck to each of its ends. The length of entire capsule is 14mm and the diameter of the capsule is 14mm . Find its surface area.

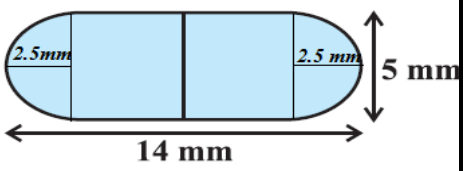

Ans : Height of the capsule = h=14 – 5 = 9mm

Radius of the capsule= r = $\frac{d}{2} = \frac{5}{2}$ = 2.5mm, $\pi = \frac{22}{7}$

Surface area of the capsule = 2(CSA of hemisphere) + CSA of cylinder

$= 2(2\pi r^2) + 2\pi rh = 2\pi r\,[2r + h]$

= **[Answer =$220mm^2$]**

---

8) A tent is in the shape of a cylinder surmounted by a conical top. If the height and diameter of the cylindrical part are 2.1m and 4m respectively, and the slant height of the top is 2.8m, find the area of the canvas used for making the tent. Also, find the cost of the canvas of the tent at the rate of ₹500 per m^2. (Note that the base of the tent will not be covered with canvas)

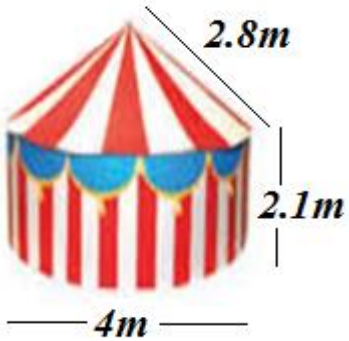

Ans : Diameter of the cylindrical part = 4m

Radius of the cylindrical part = r = $\frac{4}{2}$ = 2m

slant height of the cone =l =2.8m

Height of the cylinder =h= 2.1m, $\pi = \frac{22}{7}$

The area of the tent = CSA of the cylinder + CSA of cone

$= 2\pi rh + \pi rl = \pi r[2h + l]$

= **[Answer = $44m^2$]**

The total cost of the canvas at the rate of ₹500 / m^2 = 44 × 500 = ₹ 22000

---

9) From a solid cylinder whose height is 2.4cm and diameter is 1.4cm, a conical cavity of the same height and the same diameter is hollowed out. Find the total surface area of the remaining solid to the nearest cm^2.

Ans : Radius of the Cylinder = Radius of the cone

Radius of the cylinder / Cone = r = $\frac{d}{2}=\frac{1.4}{2}$= 0.7m

Height of the cylinder = Height of the cone

Height of the cylinder / Cone = h = 2.4 m

Slant height of the cone = l = $\sqrt{r^2+h^2}$ = $\sqrt{(0.7)^2+(2.4)^2}$

l = $\sqrt{0.49+5.76}$ = $\sqrt{6.25}$ = 2.5cm, $\pi = \frac{22}{7}$

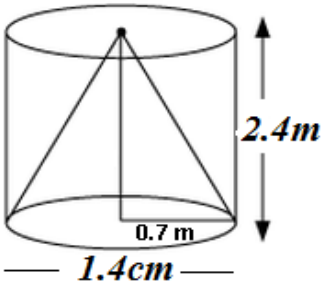

Total Surface area of the remaining solid = TSA of cylinder + Inner CSA of cone – Area of the one circular face of the cylinder

$= 2\pi r(h+r) + \pi rl - \pi r^2$ = **[Ans = 17.6m^2 ≈18m^2]**

---

10)A wooden article was made by scooping out a hemisphere from each ends of a solid cylinder, as shown in the figure. If the height of the cylinder is 10cm, and its base is of radius 3.5cm, find the total surface area of the article.

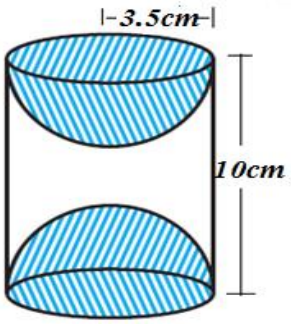

Ans : Height of the Cylinder = h = 10cm

Radius of the cylinder / Hemisphere = r= 3.5cm, $\pi = \frac{22}{7}$

T SA of the article = CSA of cylinder + 2(Inner CSA of hemisphere)

$= 2\pi rh + 2(2\pi r^2) = 2\pi r(h+2r)$

[Ans = 374cm^2]

Practice problems :

1) A toy is in the form of a cone mounted on a hemisphere both are of same radius. The diameter of the conical portion is 6cm and its height is 4cm. Determine the surface area of the solid.(take π=3.14) **[Kseeb model paper -2]**

II. Volume of a combination of solids :

1) A solid toy is in the form of a hemisphere surmounted by a right circular cone. The height of the cone is 2cm and the diameter of the base is 4cm. Determine the volume of the toy. If a right circular cylinder circumscribes the toy, find the difference of the volumes of the cylinder and the toy. (take π=3.14)

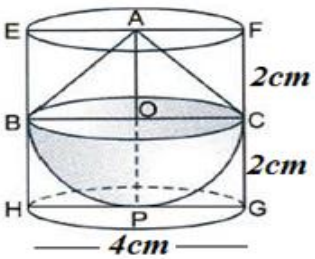

Ans : Let, BPC be the hemisphere.

ABC be the cone standing on the base of the hemisphere.

The radius BO of the hemisphere / cone= r = $\frac{4}{2}$ =2 cm

Height of the cone = h = 2cm, π=3.14

Height of the Cylinder = h^{l}= 2 + 2 = 4cm

So,Volume of the toy = Volume of the cone + Volume of the Hemisphere

$= \frac{1}{3}\pi r^2 h + \frac{2}{3}\pi r^3$

$= \frac{1}{3} \times 3.14 \times (2)^2 \times 2 + \frac{2}{3} \times 3.14 \times (2)^3 = \frac{25.12}{3} + \frac{50.24}{3} = \frac{25.12+50.24}{3}$

$= \frac{75.36}{3} = 25.12\ cm^3$

Volume of the toy right circularcylinder = $\pi r^2 h^{l} = 3.14 \times (2)^2 \times 4 = 50.24 cm^3$

so, the volume required = Volume of right circular cylinder – volume of the toy

$= 50.24 cm^3 - 25.12\ cm^3 = 25.12\ cm^3$

so, the required difference of the two volumes = $25.12\ cm^3$

Practice problems with Hints :

---

1) A solid is in the shape of a cone standing on a hemisphere with both their radii being equal to 1cm and the height of the cone is equal to its radius. Find the volume of the solid in terms of π

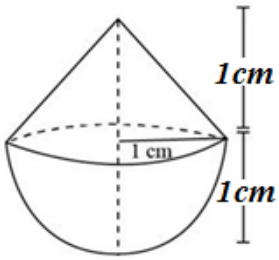

Ans : Radius of cone = Radius of hemisphere

Radius of cone / Hemisphere = r = 1cm

Height of the cone = h = 1cm, $\pi = \frac{22}{7}$

so, Volume of the solid =Volume of the cone +Volume of the Hemisphere

$= \frac{1}{3}\pi r^2 h + \frac{2}{3}\pi r^3$

= **[Answer = π cm^3]**

---

2) Rachel, an engineering student, was asked to make a model shaped like a cylinder with two cones attached at its two ends by using a thin aluminium sheet.The diameter of the model is 3cm and its length is 12cm. If each cone has a height of 2cm, find the volume of air contained in the model that Rachel made. [Assume that outer and inner dimensions of the model to be nearly the same]

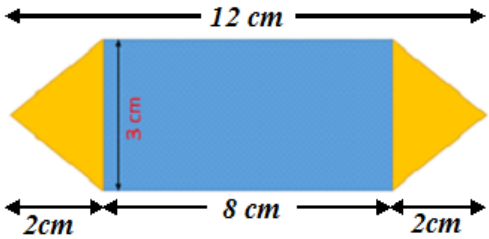

Ans : Height of the cone = h_1 = 2cm

Height of the cylinder = h_2 = (12 – 2 – 2)cm = 8cm

Radius of the cone = Radius of the cylinder

Radius of the cone / cylinder = r = $\frac{3}{2}$ = 1.5cm

Volume of the air contained in the model = 2(Volume of the cone) + volume of the cylinder

$= 2 \times \frac{1}{3}\pi r^2 h_1 + \pi r^2 h_2$

= **[Answer = 66 cm^3]**

---

3) A gulab jamun, contains sugar syrup up to about 30% of its volume. Find approximately how much syrup would be found in 45 gulab jamuns, each shaped like a cylinder with two hemispherical ends with lengths 5cm and diameter 2.8cm.

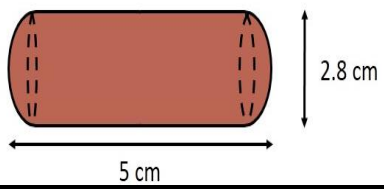

Ans : Given, $\pi = \frac{22}{7}$

Radius of the cylinder = Radius of the Hemisphere

Radius of the cylinder/hemisphere = r $= \frac{2.8}{2} = 1.4$cm

Height of the cylinder = h = 5 – 1.4 -1.4 = 5 – 2.4 = 2.2cm

Volume of the one jamun

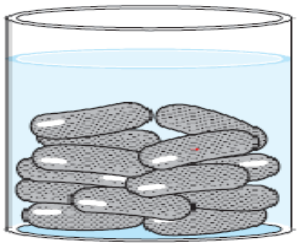

= 2×Volume of the hemispheres +volume of the cylinder

$= 2 \times \frac{2}{3}\pi r^3 + \pi r^2 h$

= **[Answer = 25.05 cm^3]**

∴ The amount of sugar contained $= 25.05 \times \frac{30}{100} = 7.515$cm^3

∴ The total amount of sugar contained in 45 jamun $= 7.515 \times 45 = 338.175$cm^3 ≈ **338cm^3**

---

4) A pen stand made of wood is in the shape of a cuboid with four conical depressions to hold pens. The dimensions of the cuboid are 15cm by 10cm by 3.5cm. The radius of each of the depressions is 0.5cm and the depth is 1.4cm. Find the volume of wood in the entire stand.

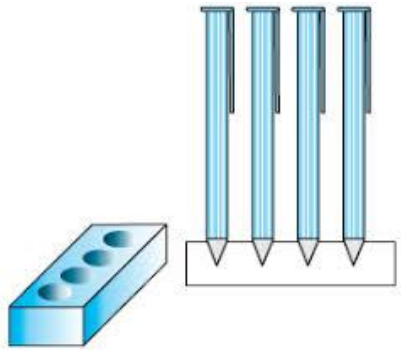

Ans : The radius of the conical depression =0.5cm

height /depth of the conical depression =1.4cm

Number of conical depressions = 4, $\pi = \frac{22}{7}$

4(Volume of the conical depressions) $= 4 \times \frac{1}{3}\pi r^2 h$

[Answer = 1.47 c

length of the cuboid shape = l =15cm

breadth of the cuboid shape= b =10cm

height of the cuboid shape = h =3.5cm

Volume of the cuboid shape = l× b × h

[Answer = 525 cm^3]

Volume of the wood in the pen stand

= Volume of the cuboid shape - 4(Volume of the conical depressions)

= 525 cm^3 - 1.47 cm^3 **= 523.53 cm^3**

---

5) A vessel is in the form of an inverted cone. Its height is 8cm and the radius of its top, which open, is 5cm. It is filled with water up to the brim. When lead shots, each of which is a sphere of radius 0.5cm are dropped in to the vessel, One- fourth of the water flows out. Find the number of lead shots dropped in the vessel.

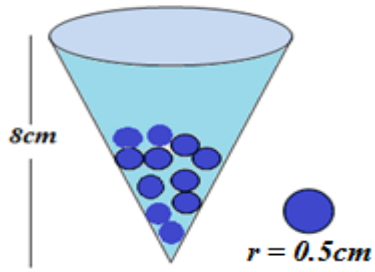

Ans : Radius of each sphere = r = 0.5cm, $\pi = \frac{22}{7}$

The Volume of the lead shots $= \frac{4}{3}\pi r^3 =$ **[Answer = $\frac{11}{21}$cm^3]**

The volume of the water in the vessel $= \frac{1}{3}\pi r^2 h =$ **[Ans=$\frac{4400}{21}$ cm^3]**

The volume of the water flows out $= \frac{4400}{21} \times \frac{1}{4} = \frac{1100}{21}$ cm^3

The number of lead shots $= \frac{Amount\ of\ water\ flows\ out}{Volume\ of\ the\ lead\ shots} = \frac{\frac{1100}{21}}{\frac{11}{21}} = \frac{1100}{11} = 100$ shots.

---

6) A solid iron pole consists of a cylinder of height 220 cm and base diameter 24 cm, which is surmounted by an another cylinder of height 60 cm and radius 8 cm . Find the mass of the pole , given that 1 cm ^{3} of iron has approximately 8g mass. (Use π =3.14)

Ans :

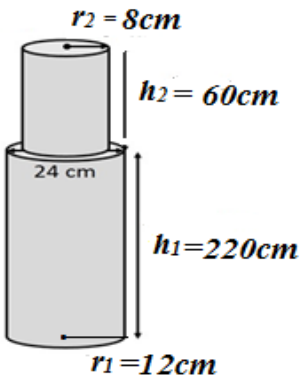

Radius of first cylinder = $r_1 = \frac{24}{2}$ = 12cm,

Height of first cylinder =h_1 =220cm

Radius of second cylinder = $r_2 = 8cm$

Height of second cylinder =h_2 = 60cm, π =3.14

Volume of the pole =

= Volume of the first cylinder + Volume of the second cylinder

= $\pi r_1^2 h_1 + \pi r_2^2 h_2$ = **[Ans :111532.8cm^3]**

The mass of the iron/cm^3 = 8g

The mass of the iron pole = 111532.8 × 8 = 892262.4g

= 892.262kg

---

7) A solid consisting of a right circular cone of height 120 cm and radius 60cm standing on a hemisphere of radius 60cm is placed upright in a right circular cylinder full of water such that it touches the the bottom. Find the volume of water left in the cylinder, if the radius of the cylinder is 60 cm and its height is 180 cm.

Ans :

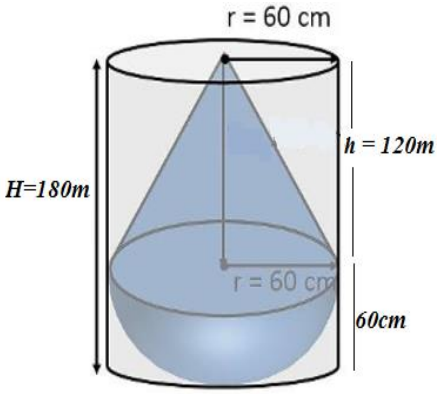

Radius of cylinder /cone / hemisphere =60cm

Height of the cylinder = H =180m

Height of the cone = h =120m, $\pi = \frac{22}{7}$

Volume of the cylinder = $\pi r^2 H$ =

= **[Ans :2036571.43cm^3]**

Volume of the cone = $\frac{1}{3}\pi r^2 h$ =

= **[Ans:452571.43 cm^3]**

Volume of the hemisphere = $\frac{2}{3}\pi r^3$ =

= **[Ans:4525571.43 cm^3]**

∴ The volume of the water left in the cylinder =

= Volume of the cylinder - Volume of the cone - Volume of the hemisphere

= **[Ans :1131428.57cm^3 / 1.131m^3]**

---

8) A spherical glass vessel has a cylindrical neck 8 cm long ,2 cm in diameter; the diameter of the spherical part is 8.5 cm. By measuring the amount of water it holds , a child finds its volume to be 345 cm ^{3}. Check whether she is correct , taking the above as the inside measurements,and π=3.14.

Ans : Height of the cylinder = h =8cm

Radius of the cylinder $r_1 = \frac{2}{2} = 1$cm

Radius of the sphere $r_2 = \frac{8.5}{2}$ cm

Volume of the vessel =

= Volume of the cylinder + Volume of the sphere

$= \pi r_1^2 h + \frac{4}{3}\pi r_2^3$

= **[Ans: 346.51 cm^3]**

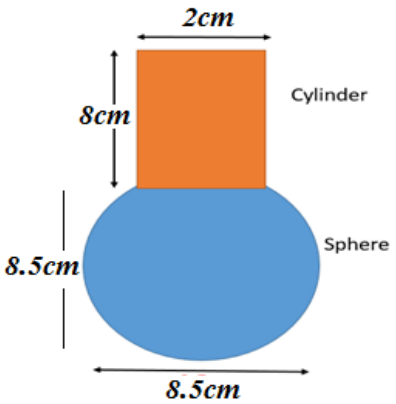

So, there is little difference in her measurement.

9) The bottom of a right cylindrical shaped vessel made from metallic sheet is closed by a cone shaped vessel as shown in the figure. The radius of the circular base of the cylinder and radius of the circular base of the cone each is equal to 7 cm. If the height of the cylinder is 20 cm and height of cone is 3 cm, calculate the cost of milk to fill completely this vessel at the rate of Rs. 20 per litre **[March : 2019]**

Ans: Radius of the cone = Radius of the cylinder

Radius of the cone / cylinder = r =7cm

Height of the cylinder = h_1 = 20cm

Height of the cone = h_2 = 3cm, $\pi = \frac{22}{7}$

Volume of the vessel = Volume of the cylinder – volume of the cone

$= \pi r^2 h_1 - \frac{1}{3}\pi r^2 h_2 =$ **[Ans : 2.926 litre]**

Cost of milk to fill completely this vessel at the rate of Rs. 20 per litre =

= 2.926 × 20 = **Rs 58.520**

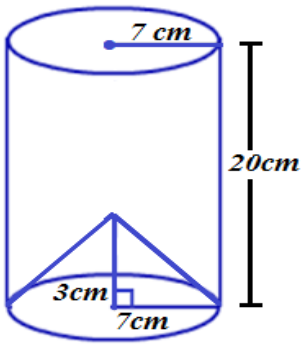

III. Conversion of solid from one shape to another :

1) A hemispherical vessel of radius 14 cm is fully filled with sand. This sand is poured on a level ground. The heap of sand forms a cone shape of height 7 cm. Calculate the area of ground occupied by the circular base of the heap of the sand. **[March:2019]**

Ans : Radius of hemisphere = r_1 =14cm, Radius of the cone = r_2 = ?

Height of Cone shape =h =7cm

According to the problem, Volme of hemisphere = Volume of the cone

$$\frac{2}{3}\cancel{\pi} r^3 = \frac{1}{3}\cancel{\pi} r^2 h \Rightarrow \frac{2}{3} r^3 = \frac{1}{3} r_2^2 h$$

$$\Rightarrow \frac{2}{3}(14)^3 = \frac{1}{3} r_2^2 \times 7$$

$$\Rightarrow \frac{2\times\cancel{3}\times14\times14\times\cancel{14}^2}{\cancel{3}\times\cancel{7}} = r_2^2$$

$$r_2^2 = 784$$

$$r_2 = \sqrt{784} = 28\text{cm}$$

∴ Area of ground occupied by the circular base of the heap of the sand = πr^2

$= \frac{22}{\cancel{7}} \times 28\times\cancel{28}^4 =$ **[Ans :2464cm^2]**

Practice problems with Hints :

1) A copper rod of diameter 1cm and length 8cm is drawn into a wire of length 18m of uniform thickness. Find the thickness of the wire.

Ans : Diameter of the copper rod d= 1cm

Radius of the copper rod = $\frac{d}{2} = \frac{1}{2}$ cm

Length of the rod = l = 8cm

The volume of the Copper rod = $\pi r^2 h$ cm^3

$= \pi \times \frac{1}{2} \times 8 =$ **2π cm^3**

The length of the new wire of the same volume l / h=18m = 18 × 100 = 1800cm

If 'r' is the radius of cross section of the wire, its volume = $\pi r^2 h$ cm^3 **= $\pi \times r^2 \times 1800$ cm^3**

Volume of the wire = volume of the Copper rod

$\pi \times r^2 \times 1800 = 2\pi$

= **[Ans : r = $\frac{1}{30}$ cm]**

So, the diameter of the cross section = Thickness of the wire = 2r =2 × $\frac{1}{30} = \frac{1}{15}$ = 0.67 cm

2) A hemispherical tank full of water is emptied by a pipe at the rate of 3 $\frac{4}{7}$ litre per second. How much time will it take to empty half the tank, If it is 3m in diameter?

(Take $\pi = \frac{22}{7}$)

Ans : Diameter of the Hemispherical tank= d = 3m

Radius of the Hemispherical tank = r = $\frac{d}{2} = \frac{3}{2}$ m

Volume of the tank **=** $\frac{2}{3}\pi r^3 m^3$

= **[Ans : $\frac{99}{14}$ m^3]**

So, the volume of the water to be emptied = Half of the Volume of the tank = $\frac{1}{2} \times \frac{99}{14}$ **m^3**

= $\frac{99}{28}$ × 1000Litre [∵1 m^3 = 1000Litre]

= $\frac{99000}{28}$ Litre

Since, $\frac{25}{7}$ Litre of water is emptied in 1 Second.

$\frac{99000}{28}$ Litre of water will be emptied = $\frac{\frac{99000}{28}}{\frac{25}{7}} = \frac{99000}{28} \times \frac{7}{25}$ Seconds = **= 16.5 Minutes.**

3) A metallic Sphere of radius 4.2cm is melted and and recast into the shape of the cylinder of radius 6cm. Find the height of the cylinder.

Ans : Radius of the Sphere = r_1 = 4.2cm

Radius of the Cylinder = r_2 = 6cm

Volume of the Sphere = Volume of the Cylinder

$\frac{4}{3}\pi r_1^3 = \pi r_2^2 h$ = **[Ans : h = 2.744cm]**

4) Metallic spheres of radii 6cm, 8cm and 10cm, respectively are melted to form a Single solid sphere. Find the radius of the resulting sphere.

Ans : Radius of 1st sphere = r_1 = 6cm

Radius of 2nd sphere = r_2 = 8cm

Radius of 3rd sphere = r_3 = 10cm

Let, Radius of resulting sphere/New sphere = r

Volume of the new Sphere = Volumes of the 1st +2nd +3rd Spheres

$\frac{4}{3}\pi r^3 = \frac{4}{3}\pi r_1^3 + \frac{4}{3}\pi r_2^3 \ \frac{4}{3}\pi r_3^3$ (Take $\frac{4}{3}\pi$ as common factor)

= **[Ans : r = 12cm]**

---

5) A 20 m deep well with diameter 7m is dug and the earth from digging is evenly spreadout to form flatform 22mby14m. Find the height of the platform.

Ans : Deep of the well =h= 20m.

Diameter of the well= d=7m

Radius of the well= r $= \frac{d}{2} = \frac{7}{2}$ m

Length of the platform =l=22m, Breadth of the platform = b=14m,

Height of the platform = h=?

Volume of the Well(Cylinder) = Volume of the Platform

$\pi r^2 h = l \times b \times h$

h = **[Ans : h=2.5m]**

---

6) A well of diameter 3m is dug 14m deep. The earth taken out of it has been spread evenly all around it in the shape of a circular ring of width 4m to form an embankment. Find the height of the embankment.

Ans :

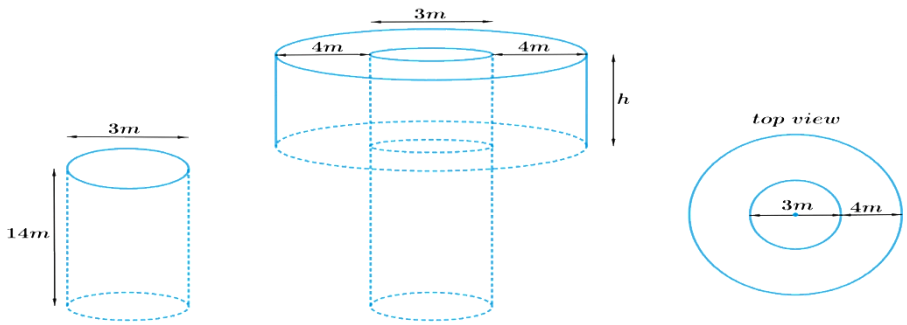

Diameter of the well = d=3m

Radius of the well = r $= \frac{d}{2} = \frac{3}{2}$ m =1.5m

Height of the well = h=14m

Volume of the Well = $\pi r^2 h$

= **[Ans : 99cm^3]**

Width of the Circular ring shaped embankment =4m

Diameter of the embankment =4+3+4=11m

Radius of the embankment = r $= \frac{d}{2} = \frac{11}{2}$ m

Volume of the embankment = $\pi r^2 h$

$= \frac{22}{7} \quad \frac{11}{2}\left[\times \frac{11}{2} - \frac{3}{2} \times \frac{3}{2} \quad \times h\right]$

= **[Ans : 88h]**

Volume of the embankment = Volume of the Well

[Ans : h = 1.125m]

---

7) **A container shaped like a right circular cylinder having diameter 12cm and height 15cm is full of ice cream. The icecream is to be filled into cones of height 12cm and diameter 6cm,having a hemispherical shape on top. Find the number of such cones which can be filled with icecream.**

Ans :

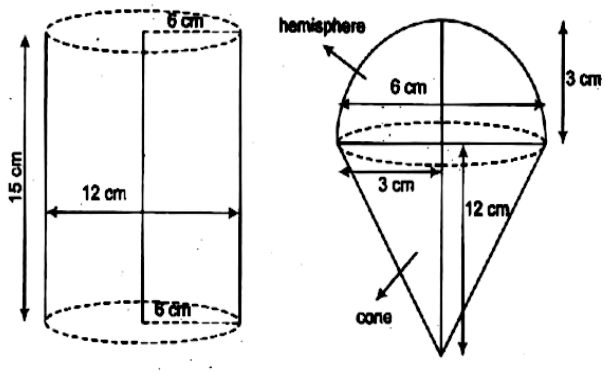

Diameter of the container =d= 12cm

Radius of the container = r = $\frac{d}{2}$

$= \frac{12}{2}$ =6cm

Height of the container = h=15cm

A container is in the shape of right circular cylinder.

Icecream in the cylinder =Volume of the cylinder = $\pi r^2 h$

= **[Ans :** $\frac{11880}{7}$ **cm^3]**

Ice cream is filled in the each cone = Volume of the cone + Volume of the Hemisphere

$= \frac{1}{3}\pi r^2 h + \frac{2}{3}\pi r^3$

= **[Ans :** $\frac{1188}{7}$ **cm^3]**

Number of cones = $\frac{Icecream\ in\ the\ cylinder}{Ice\ cream\ is\ filled\ in\ the\ each\ cone}$

$= \frac{\frac{11880}{7}}{\frac{1188}{7}} = \frac{11880}{7} \times \frac{7}{1188} = 10$

Number of cones = 10

---

8) How many Silver coins, 1.75cm in diameter and of thickness 2mm, must be melted to form a cuboid of dimensions 5.5cm×10cm×3.5cm?

Ans :

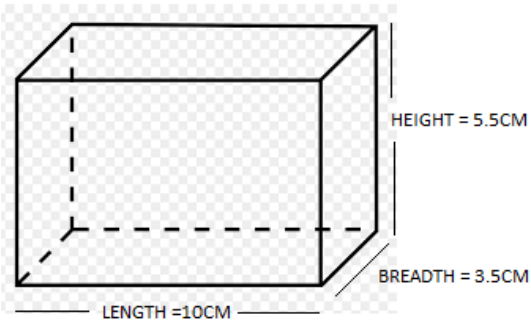

Diameter of the Silver coin =1.75cm

Radius of the Silver coin = r = $\frac{d}{2}$ =$\frac{1.75}{2}$ cm

Thickness/Height of the Silver coin =2mm=0.2cm

Volume of the Silver coin = π r ^{2}h

= **[Ans : 0.48125 cm^3]**

Length of the cuboid =10cm,

Breadth of the Cuboid =3.5cm,

Height of the Cuboid =5.5cm

Volume of the Cuboid = l × b× h

[Ans : 192.5 cm^3]

Number of Silver coins melted to form cuboid = $\frac{Volume\ of\ the\ Cuboid}{Volume\ of\ the\ Silver\ coin}$ = $\frac{192.5}{0.48125}$ = **400**

---

9) A Cylindrical bucket, 32cm high and with radius of base 18cm,is filled with sand. This bucket is emptied on the ground and a conical heap of sand is formed. If the height of the conical heap is 24cm, find ther radius and slant height of the heap.

Ans :

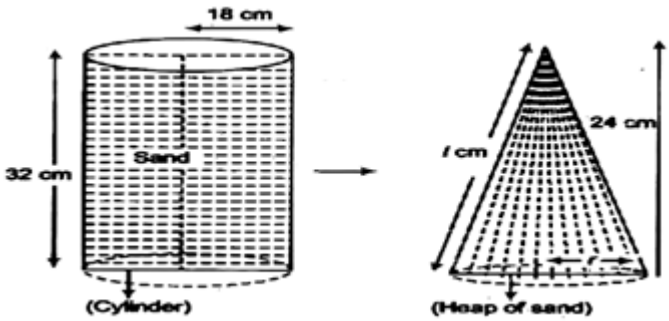

Height of the Cylindricalshaped bucket = h_1

= 32cm

Radius of the bucket = r_1 =18cm

Volume of the Cylindrical bucket = π r_1 ^{2}h

= **[Ans : $\frac{228096}{7}$ cm^3]**

Height of the conical heap = h_2 =24cm

Radius of the Conical heap = r_2 =?

Slant height of the Conical heap = l = ?

Volume of the Conical heap = $\frac{1}{3}\pi r_2$ $^2h_2$

= **[Ans : $\frac{528}{21}$ r^2]**

Volume of the Cylindrical bucket = Volume of the Conical heap

$\frac{228096}{7}$ = $\frac{528}{21}$ r^2 ⇒ r = **[Ans r = 36cm]**

Slant height of the Conical heap = l = $\sqrt{r^2+h^2}$ = $\sqrt{36^2+24^2}$ = **[Ans : $12\sqrt{13}$]**

---

10) Water in a canal, 6m wide and 1.5m deep, is flowing with a speed of 10 km/h. How much area will it irrigate in 30minutes, if 8cm of standing water is needed?

Ans : Area of crosssection of the Canal = Length × Breadth = 6 × 1.5= 9m^2

Speed of water = 10 km/h = $\frac{10\times1000}{60}$ = $\frac{1000}{6}$ m/sec

Now, The volume of water flow from the canal in One minute = 9 × $\frac{1000}{6}$ = 1500m^2

Hence, water flows in 30 minutes = 1500 × 30 = 45000m^2

The volume of water flows in 30 minutes = Volume of water irrigating the required area

= 8cm = $\frac{8}{100}$ m = 0.08m

Area of irrigated in in 30minutes = $\frac{Volume}{Height}$

$= \frac{45000}{0.08} = \frac{4500000}{8} = 562500m^2$

∴ The area irrigated in 30minutes = $562500m^2$

IV.Frustum.of a Cone

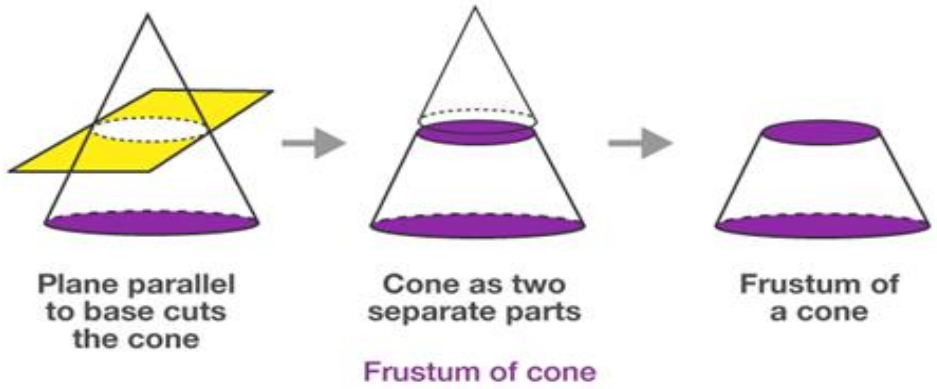

1) The curved surface area of the frustum of the cone = $\pi(r_1+r_2)l$,
Where, $l = \sqrt{h^2 + (r_1 - r_2)^2}$
2) Total surface area of the frustum of the cone = $\pi l\,(r_1+r_2) + \pi r_1^2 + \pi r_2^2$,
Where, $l = \sqrt{h^2 + (r_1 - r_2)^2}$
3) Volume of the frustum of the cone = $\frac{1}{3}\pi h[r_1^2 + r_2^2 + r_1r_2]$

Practice problems with Hints :

1**) A drinking glass is in the shape of a frustum of a cone of height 14 cm. The diameters of its two circular ends are 4cm and 2cm. Find the capacity of the glass.**

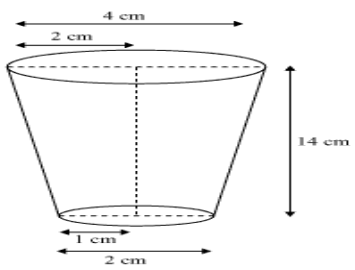

Ans : The height of the frustum = h = 14cm, $\pi = \frac{22}{7}$

The diameters d_1 =4cm ⟹ Radius $r_1 = \frac{d_1}{2} = \frac{4cm}{2}$ =2cm

The diameters d_2 =2cm ⟹ Radius $r_2 = \frac{d_2}{2} = \frac{2cm}{2}$ =1cm

The capacity of the glass =?

The capacity of the glass =Volume of the frustum of the cone

Volume of the frustum of the cone = $\frac{1}{3}\pi h[r_1^2 + r_2^2 + r_1r_2]$

$= \frac{1}{3} \times \frac{22}{7} \times 14[2^2 + 1^2 + 2\times1]$

$= \frac{1}{3} \times \frac{22}{7} \times 14[4 + 1 + 2] = \frac{1}{3} \times 22 \times 2(7)$

$= \frac{1}{3} \times 22 \times 14 = \frac{308}{3} = 102\frac{2}{3}$ cm

The capacity of the glass = $102\frac{2}{3}$ cm

---

2)The slant height of a frustum of a cone is 4cm and the perimeters (circumference) of its circular ends are 18cm and 6cm. Find the curved surface area of the frustum.

Ans :

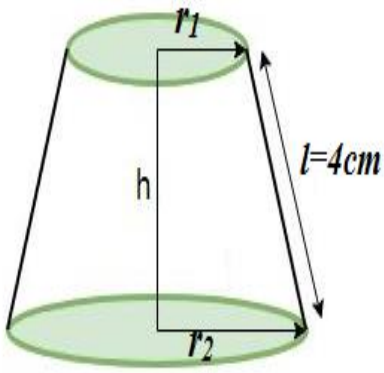

The slant height of a frustum of a cone =l= 4cm

The Circumference of the circular top = 6cm

$$2\pi r_1 = 6 \implies r_1 = \frac{6}{2\pi} = \frac{3}{\pi}$$

The Circumference of the circular base = 18cm

$$2\pi r_2 = 18 \implies r_2 = \frac{18}{2\pi} = \frac{9}{\pi}$$

The curved surface area of the frustum of the cone = $\pi(r_1+r_2)l$

$$= \pi \times \left(\frac{3}{\pi} + \frac{9}{\pi}\right)4$$

$$= \pi \times \left(\frac{3+9}{\pi}\right)4 = \pi \times \left(\frac{12}{\pi}\right)4 = 48cm^3$$

∴ The curved surface area of the frustum of the cone = $48cm^3$

---

3) A fez, the cap used by the Turks, is shaped like the frustum of a cone. If its radius on the open side is 10 cm, radius at the upper base is 4cm and its slant height is 15 cm, find the area of material used for making it.

Ans :

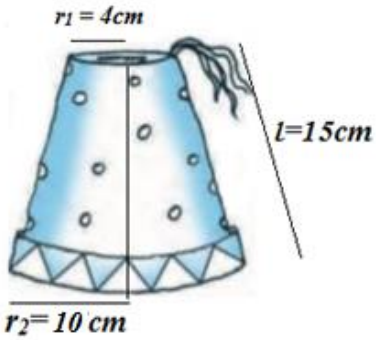

Radius of the upper base = r_1= 4 cm

Radius of the lower base = r_2= 10 cm

Slant height = l = 15cm

Total surface area of the fez = curved surface area of the fez + Area of circular top

$$= \pi(r_1+r_2)l + \pi r_1 2$$

=

∴ The the area of material used for making a fez = **$710\frac{2}{7}cm^3$**

---

4) A container, opned from the top and made up of a metal sheet, is in the form of a frustum of a cone of height 16cm with radii of its lower and upper ends as 8cm and 20cm,respectively. Find the cost of milk which can completely fill the container, at the rate of Rs.20 per litre. Also find the cost of metal sheet used to make the container, if it costs Rs.8 per $100cm^2$. (Take π = 3.14)

Ans :

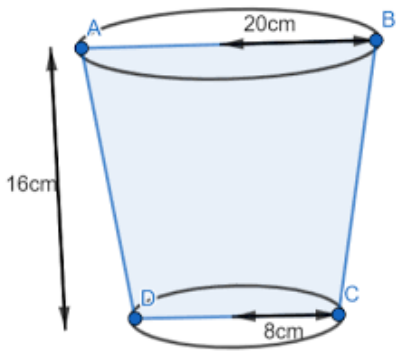

Height of the cone = h = 16cm

Radii of its lower end =r_1= 8cm

Radii of its upper end =r_2= 20cm

Volume of the frustum of the cone = $\frac{1}{3}\pi h[r_1^2 + r_2^2 + r_1 r_2]$

=

=

[Ans =$10449.9cm^2$ = 10.45 ltrs]

Total amount required at the rate of Rs20/ltr = 10.45×20 = Rs. 209

To find the cost of metal sheet used to make the container :

$l = \sqrt{h^2 + (r_1 - r_2)^2} = \sqrt{16^2 + (8-20)^2} = \sqrt{256 + 144} = \sqrt{200}$ **= 20cm**

TSA of frustum of cone = CSA of frustum of cone + Area of the circular base

$= \pi(r_1+r_2)l + \pi r_1 2$

=

= **[Ans = 1959.36cm^2]**

Cost of metal for 100cm^2 = Rs.8

Total cost of metal used $= \frac{\text{TSA of frustum of cone}}{100} \times 8$

$= \frac{1959.36}{100} \times 8$

= Rs156.75

∴ Total cost of metal used = Rs156.75

PRAKASH.L , MATHEMATICS TEACHER

HTTGGHS, CHALLAKERE